U.S. General Services Administration
Invitation for Bids

SALE OF GOVERNMENT REAL PROPERTY

WEST HEATING PLANT

IFB Number DC 497-1 – Revised 24 January 2013

This Property is located at 1051 29th Street, NW, Washington, DC 20007-3821. The Property is situated on approximately 2.08 acres and is improved with 1 building with a footprint of approximately 20,000sf.

Bids for the purchase of the Government-owned Property described in the Property Description portion of this Invitation for Bids will be received continuously and will be posted at RealEstateSales.gov.

Auction Summary

Sale Type: **Online Auction**

Start Date: **January 18, 2013**

End Date: **Soft Close – February 19, 2013**

Starting Bid: **$ 500,000**

Registration Deposit: **$ 500,000**

Bid Increment: **$ 200,000**

Sales Information

Tim Sheckler
202-401-5806
tim.sheckler@gsa.gov

Online Auction

RealEstateSales.gov
Register and submit your bid

Online Auction Assistance

Tim Sheckler
202-401-5806
e-mail: tim.sheckler@gsa.gov

Send Bid Form and Registration Deposit to:

U.S. General Services Administration
Real Property Utilization and Disposal (WPR)
[301 7th Street, SW, Room 7709
Washington, DC 20407]
Attn: Tim Sheckler

Property Disposal Web Page

https://propertydisposal.gsa.gov
Click on District of Columbia to view and download Property Sales information

Inspection Opportunities:

Property inspections are by appointment only. Showings are generally on Fridays from 10am to Noon.

TABLE OF CONTENTS

Property Description ..... page 2
General Terms of Sale ..... page 5
Instructions to Bidders..... page 12
Notices and Covenants ..... page 19
Post Transfer Advisory Notice ……page 26
Bidder Registration and Bid Form..... page 27

PROPERTY DESCRIPTION

1. LOCATION AND SETTING

1051 29th Street, NW, Washington, DC 20007-3821

2. SALE PARCEL DESCRIPTION

The 2.08 acre property is located in the historic Georgetown district of Washington, DC and contains one building, a 110-foot tall former heating plant, and 4 large fuel oil storage tanks. A large concrete and stone retaining wall surrounds much of the site consisting of 9,335 rentable square feet over six partial interior floors. The building footprint is approximately 100' x 200'. The plant contains significant amounts of equipment and piping related to the former steam generation activities. Steam generation activities ceased at the facility in 2000; since then the property has been used for office purposes and as the site of the backup fuel supply for the GSA Central Heating Plant. GSA vacated the facility in May 2012.

3. DRIVING DIRECTIONS

The property is located on 29th St. between M and K Streets, immediately south of the C&O canal. It is nearby to major thoroughfares such as the Whitehurst Freeway, Rock Creek Parkway, and the George Washington Parkway.

4. LEGAL DESCRIPTION

PORTIONS OF LOTS 4 THRU 9, 20, 21 AND 46, ALL OF LOTS 11, 22, 43 THRU 45, AND 101, IN DEAKINS, LEE & CASENAVE'S ADDITION TO GEORGETOWN, AS SHOWN AS SQUARE 23 OF THE ORIGINAL GEORGETOWN PLATS, NOW KNOWN AS SQUARE 1193, AND A PORTION OF C&O CANAL RESERVATION 404, AND PORTIONS OF THE LAND OF THE UNITED STATES OF AMERICA AND THE DISTRICT OF COLUMBIA (UNSUBDIVIDED AND UNASSESSED AREAS), ALL AS MORE PARTICULARLY DESCRIBED AS FOLLOWS:

BEGINNING FOR THE SAME AT AN "X-CUT" FOUND IN A STONE WALL IN C&O CANAL RESERVATION 404, SAID POINT BEARING DUE NORTH, 5.03 FEET FROM THE NORTHEAST CORNER OF LOT 20, DEAKINS, LEE & CASENAVE'S ADDITION TO GEORGETOWN, NOW SQUARE 1193; AND ALSO BEING ON THE EASTERLY LINE OF 29TH STREET, NW; THENCE RUNNING IN SAID WALL THROUGH SAID RESERVATION,

1. DUE EAST 3.00 FEET TO A POINT; THENCE CONTINUING IN SAID WALL,

2. SOUTH 06°52'10" EAST 1.40 FEET TO A POINT ON THE BACK OF THE WALL; THENCE CONTINUING GENERALLY WITH THE BACK OF THE WALL THROUGH SAID RESERVATION AND THROUGH LOTS 21, 5, 6, 7, AND 8 OF THE AFORESAID DEAKINS, LEE & CASENAVE'S ADDITION TO GEORGETOWN, THE FOLLOWING EIGHTEEN (18) COURSES AND DISTANCES:

3. NORTH 88°47'51" EAST 14.18 FEET TO A POINT;

4. SOUTH 80°08'44" EAST 39.70 FEET, PASSING THROUGH THE NORTHEAST CORNER OF THE AFOREMENTIONED LOT 20 AT 23.00 FEET, TO A POINT;

5. SOUTH 81°38'37" EAST 16.19 FEET TO A POINT;

6. SOUTH 83°38'38" EAST 2.00 FEET TO A POINT;

7. 17.72 FEET ALONG THE ARC OF A CURVE TO THE LEFT HAVING A RADIUS OF 9.88 FEET AND BEING SUBTENDED BY A CHORD BEARING NORTH 44°59'53" EAST 15.44 FEET TO A POINT;

8. 2.59 FEET ALONG THE ARC OF A CURVE TO THE RIGHT HAVING A RADIUS OF 8.65 FEET AND BEING SUBTENDED BY A CHORD BEARING NORTH 37°38'09" EAST 2.58 FEET TO A POINT;

9. 1.32 FEET ALONG THE ARC OF A CURVE TO THE RIGHT HAVING A RADIUS OF 1.50 FEET AND BEING SUBTENDED BY A CHORD BEARING OF NORTH 71°22'27" EAST 1.28 FEET TO A POINT;

10. SOUTH 83°19'24" EAST 1.29 FEET TO A POINT;

11. SOUTH 09°04'13" WEST 1.35 FEET TO A POINT;

12. SOUTH 83°43'18" EAST 18.15 FEET TO A POINT;

13. NORTH 06°16'42" EAST 1.32 FEET TO A POINT;

14. SOUTH 83°00'52" EAST 82.73 FEET TO A POINT;

15. SOUTH 03°00'14" WEST 1.51 FEET TO A POINT;

16. SOUTH 82°42'39" EAST 17.56 FEET TO A POINT;

17. NORTH 07°24'53" EAST 1.39 FEET TO A POINT;

18. SOUTH 82°12'54" EAST 17.76 FEET TO A POINT;

19. 4.83 FEET ALONG THE ARC OF A CURVE TO THE RIGHT HAVING A RADIUS OF 3.31 FEET AND BEING SUBTENDED BY A CHORD BEARING SOUTH 40°25'39" EAST 4.41 FEET TO A POINT; AND

20. SOUTH 01°21'35" WEST 3.77 FEET TO A POINT ON THE FACE OF A STONE WALL; THENCE CONTINUING GENERALLY WITH THE FACE OF THE WALL AND THE ANGLES AND DISTANCES AS SHOWN ON A TRANSFER OF JURISDICTION PLAT RECORDED IN THE SUBDIVISION BOOKS OF THE OFFICE OF THE SURVEYOR, D.C. IN BOOK 117 AT PAGE 12, AND RUNNING THROUGH SAID LOT 8 AND LOT 9, DEAKINS, LEE & CASENAVE'S ADDITION TO GEORGETOWN, AND THROUGH THE LAND OF THE UNITED STATES OF AMERICA AND THE DISTRICT OF COLUMBIA, (UNSUBDIVIDED AND UNASSESSED LAND), THE FOLLOWING FOUR (4) COURSES AND DISTANCES:

21. SOUTH 75°30'15" EAST 1.45 FEET TO A POINT;

22. 82.84 FEET ALONG THE ARC OF A CURVE TO THE RIGHT HAVING A RADIUS OF 71.50 FEET AND BEING SUBTENDED BY A CHORD BEARING OF SOUTH 42°18'46" EAST 78.28 FEET TO A POINT;

23. 109.16 FEET ALONG THE ARCH OF A CURVE TO THE RIGHT HAVING A RADIUS OF 139.00 FEET AND BEING SUBTENDED BY A CHORD BEARING OF SOUTH 13°22'36" WEST 106.38 FEET TO A POINT;

24. SOUTH 35°52'28" WEST 333.29 FEET TO A POINT, SAID POINT BEING OPPOSITE AND 0.15 FEET DISTANT FROM A CORNER OF SAID STONE WALL; THENCE CONTINUING WITH THE ANGLES AND DISTANCES AS SHOWN SAID TRANSFER OF JURISDICTION PLAT,

25. SOUTH 01°04'08" WEST 0.79 FEET TO A POINT; THENCE CONTINUING WITH THE ANGLES AND DISTANCES OF SAID TRANSFER OF JURISDICTION PLAT, AND GENERALLY WITH THE FACE

OF A STONE WALL, AND WITH THE SAME LINE EXTENDED THROUGH LOT 46, DEAKINS, LEE & CASENAVE'S ADDITION TO GEORGETOWN,

26. NORTH 88°55'52" WEST 61.60 FEET, CROSSING THE SOUTHEASTERLY LINE OF SAID LOT 46 AT 30.44 FEET, TO A POINT; SAID POINT BEING ON THE AFOREMENTIONED EAST LINE OF 29TH STREET, NW AND LYING 11.48 FEET NORTH OF THE SOUTHWEST CORNER OF SAID LOT 46; THENCE RUNNING WITH SAID EAST LINE OF 29TH STREET, NW AND THE WESTERLY LINE OF DEAKINS, LEE & CASENAVE'S ADDITION TO GEORGETOWN, AND THROUGH THE C&O CANAL RESERVATION 404,

27. DUE NORTH 452.64 FEET TO THE POINT OF BEGINNING, AND CONTAINING 90,672 SQUARE FEET OR 2.08154 ACRES OF LAND MORE OR LESS.

5. TAX PARCEL ID (OR ASSESSOR'S PARCEL NO.)

The West Heat Plant parcel is located on square 1193 and is generally composed of tax lots 800, 801, 802, 803, 804, and parts of lots 45 and 46.

6. EASEMENTS, ENCROACHMENTS AND RESERVATIONS

The Property will be sold subject to any and all covenants, reservations, easements, restrictions, encroachments, and rights, recorded or unrecorded, in favor of third parties, for purposes including, but not limited to, highways, streets, power lines, telephone lines and equipment, pipelines, drainage, sewer and water mains and lines, public utilities, public roads, and other rights-of-way, and the easements, reservations, rights and covenants reserved by the Grantor herein, as well as any and all rights and reservations required by federal law and/or regulations upon conveyance of federal property.

There is a reservation for air rights to accommodate the Whitehurst Freeway as articulated in D.C. Formal Agreement No. 2257 for the construction of the Potomac River Freeway (Whitehurst Freeway) recorded July 3, 1963 in Liber 12025 at folio 396. The accompanying Transfer of Jurisdiction of air rights and land for highway purposes is shown on the plat recorded in Liber 139 at folio 13.

There is also a sewer easement running North-South through the property as set forth in a Release recorded June 25, 1940 in Liber 7489 at folio 69.

7. UTILITIES & SERVICE PROVIDERS

All typical public utilities are available to the Property, including water, sewer, electrical, gas and telephone. Procurement of utility service shall be the responsibility of the Purchaser as of the date of conveyance. Bidders are urged to contact the utility providers below for information on the availability of utilities.

Gas and Electric

Pepco:	(202) 833-7500
Washington Gas:	(202) 624-6049

Telephone

Verizon:	1-800-837-4966

Water, Sewer and Storm Drain

DC Water:	(202) 787-2000

Solid Waste Disposal
Department of Public Works: (202) 673-6833

GENERAL TERMS OF SALE

1. DEFINITIONS

a. INVITATION FOR BIDS

The term "Invitation for Bids" ("IFB") refers to this document and the following items that are attached hereto and incorporated herein: the Property Description; General Terms of Sale; Instructions to Bidders; Notice and Covenants and/or Special Terms of Sale; Bidder Registration and Bid Form for Purchase of Government Property and Exhibits. Should the aforementioned documents be modified or supplemented by any addenda or amendments issued by the Government prior to the conclusion of the online auction, those addenda and amendments shall be part of the IFB.

b. GOVERNMENT

The term “Government” as used herein refers to the United States of America, and is used interchangeably with “Seller” and “Grantor.”

c. GENERAL SERVICES ADMINISTRATION

The term “General Services Administration” (“GSA”) as used herein refers to the United States General Services Administration, a Federal agency.

d. PROPERTY

The term “Property” refers to the property or properties described in the Property Description of this IFB.

e. AS-IS

The term “As-Is” means that the Government is selling, and the buyer is buying the Property in whatever condition it presently exists, and that the buyer is accepting the Property “with all faults,” whether or not they could be ascertained by an inspection of the Property or review of any due diligence material available.

f. WHERE-IS

The term “Where-Is” means that the Government is selling, and the buyer is buying, the Property in whatever location it presently exists.

g. PURCHASER

The term “Purchaser” refers to the bidder whose bid the Government accepts and is used interchangeably with “Buyer” and “Grantee.”

h. BIDDER(S)

The term “Bidder” or “Bidders” as used herein refers to the offeror or offerors for the purchase of the subject Property, and is used interchangeably with “you.”

i. BID INCREMENT/INTERVAL

The "Bid Increment" is the minimum amount of money required to increase a starting or current bid. "Bid Interval" is the maximum amount of time in which to make a bid before the auction ends. The Bid Interval is also referred to as the Inactivity Period at RealEstateSales.gov.

j. FLAT BID

A flat bid is for an amount at least the current bid plus the posted minimum Bid Increment. If the bid is greater than another bidder's automatic bid, the system will consider this flat bid as the current (winning) bid. If the bid is less than or equal to another bidder's automatic bid, the system will record the bid but it will not be considered the current (winning) bid.

k. AUTOMATIC BID

Also known as "bid by proxy" wherein the bidder establishes a person to bid on their behalf at auction up to a certain limit. In the case of on-line auctions, computers have automated the proxy role and bidders establish their bid limits on-line and the software answers bid challenges by automatically making the next bid increment up to the proxy limit.

l. HIGH BIDDER

The term "High Bidder" refers to the bidder, whose bid conforms to the terms and conditions of the IFB, is the highest dollar bid at the close of the auction and is determined by the Government to be the most acceptable bid.

m. BACKUP BIDDER

The term "Backup Bidder" refers to the bidder, whose bid conforms to the terms and conditions of the IFB, is the second-highest dollar bid at the close of the auction and is determined by the Government to be the most acceptable bid.

n. WEBSITE

The GSA Auctions® website, GSAAuctions.gov, has been developed to allow the general public the opportunity to bid electronically on a wide array of Federal assets, including real property. Auctions for real property are offered as a separate asset category at GSA Auctions and can be viewed at RealEstateSales.gov. Additional information can also be found at propertydisposal.gsa.gov.

2. DESCRIPTION PROVIDED IN IFB

The description of the Property, and all other information provided with respect to the Property set forth in the IFB, are based on the best information available to GSA, Real Property Utilization and Disposal (WPTZ) and are believed to be correct. Any error or omission, including but not limited to, the omission of any information available to the agency having custody over the Property and/or any other Federal agency, shall NOT constitute grounds or reason for nonperformance of the contract of sale, or claim by purchaser for allowance, refund or deduction from the purchase price.

3. INSPECTION

The Property will be made open for inspection at the following times:

Fridays from 10am to Noon, by appointment.

No one will be allowed access to the Property without the presence of a GSA employee or designee.

Bidders are invited, urged, and cautioned to inspect the Property prior to submitting a bid. The failure of any bidder to inspect, or to be fully informed as to the condition of all or any portion of the Property, will not constitute grounds for any claim or demand for adjustment or withdrawal of a bid after the auction.

4. CONTRACT

The IFB and the bid, when accepted by the Government shall constitute an agreement for sale ("Agreement") between the high bidder ("Purchaser") and the Government. Such Agreement shall constitute the whole contract to be succeeded only by the formal instrument(s) of transfer, unless modified in writing and signed by both parties. No oral statements or representations made by, or for, or on behalf of either party shall be a part of such contract. In addition, the Purchaser shall not transfer or assign the Agreement without the express written consent of the Government. Any assignment transaction without such consent shall be void.

5. CONDITION OF PROPERTY

The Property is offered for sale **"AS IS" AND "WHERE IS"** without representation or warranty, expressed or implied. The Purchaser, and Purchaser's successors and assigns, or any party-in-possession of the Property, or any part thereof, further acknowledges that the Government makes no representations or warranty concerning the title, zoning, character, condition, size, quantity, quality and state of repair of the Property. Information on the property can be viewed at www.georgetownheatingplant.com and www.realestatesales.gov. The Government makes no other agreement or promise to alter, improve, adapt or repair the Property not otherwise contained herein. Purchaser shall rely solely on its own due diligence and examination of the Property. Purchaser acknowledges that there will be no claims or any allowances or deductions upon grounds that the Property is not in condition or fit to be used for the purpose of which intended by the Purchaser after the conclusion of the auction.

6. ZONING

The Property is currently unzoned, however, the zoning of the adjacent parcels to the north and west of the site, are zoned W-2. Any future zoning of the Property is subject to the jurisdiction of the District of Office of Zoning, and would be done in accordance with the current District of Columbia's Comprehensive Plan guidance for the site.

Verification of the present zoning and determination of permitted uses, along with compliance of the Property for any proposed future use, shall be the responsibility of the bidder; and the Government makes no representation in regard to zoning matters. Any inaccuracies or changes in the zoning information shall NOT be cause for adjustment or rescission of any contract resulting from this IFB.

The DC Office of Planning has provided GSA the information below regarding future zoning of the site:

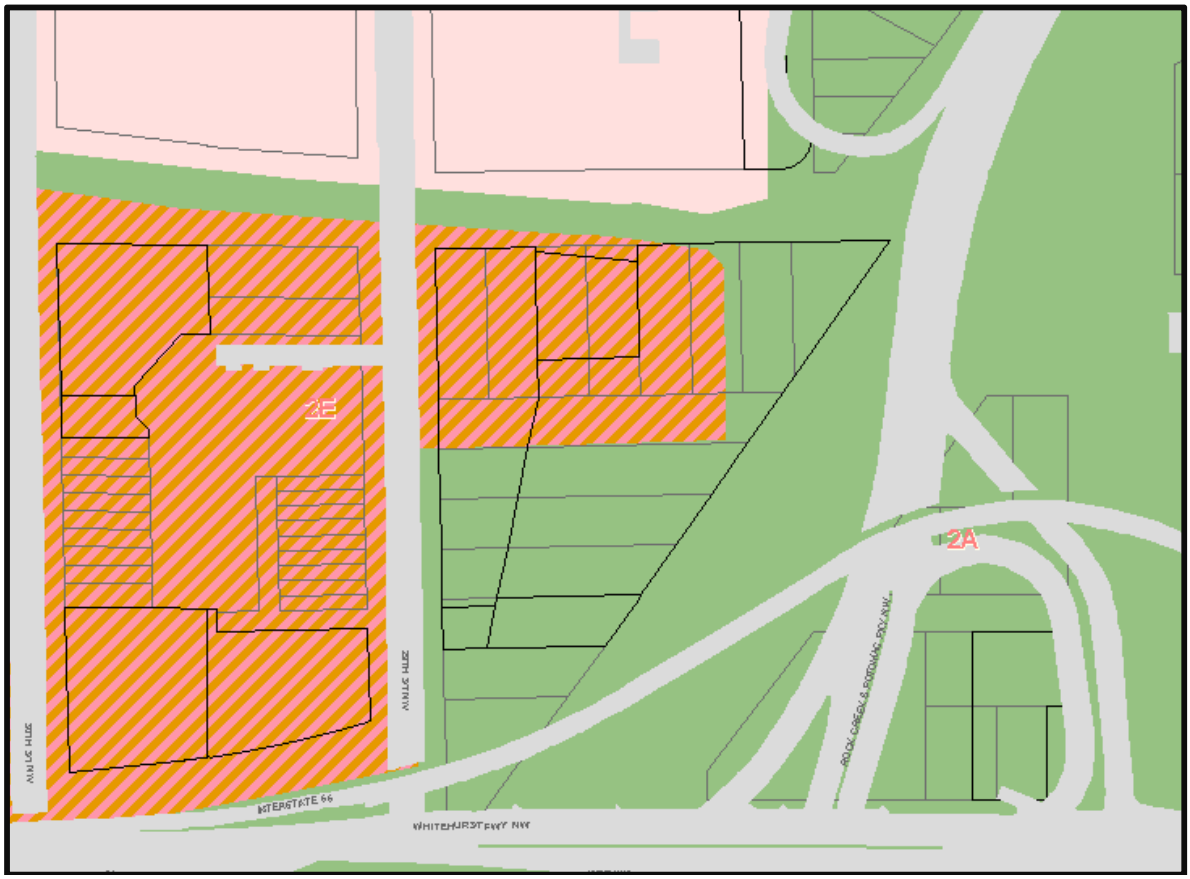

District of Columbia 2010 Comprehensive Plan Future Land Use Map
Designation:

Stripes = Mixed Use Medium Density Commerical/Medium Density Residential
Green – Parks, Recreation and Open Space

<u>Zoning and Redevelopment</u>
Any future development and reuse of the site shall be subject to District of Columbia zoning (Title 11 DCMR). Because of the sensitive nature and location of the site, it is anticipated that the zoning and redevelopment will be achieved through a Planned Unit Development. District zoning may not be inconsistent with the adopted District of Columbia Comprehensive Plan. The Comprehensive Plan identifies the northern portion of the site for a combination of mixed-use medium density commerial/residential and the southern portion for parks, recreation and open space.

<u>DC Historic Preservation</u>
The site is located in the Georgetown Historic District, a National Historic Landmark, and the plant itself has been determined to be eligible for historic landmark designation. The eligibility and location will also require review from the Old Georgetown Board and the US Commission of Fine Arts and the District's Historic Preservation Review Board.

<u>PUD Process</u>
The Planned Unit Development process is anticipated to proceed as follows after the transfer:

- *Pre-filing meetings are held with Office of Planning, including Historic Preservation staff, (OP) to discuss and go over design proposal and how the application complies with Chapter 24 of 11 DCMR (Zoning).*

- *An application is filed with the Office of Zoning (OZ) (filing requirements available at www.dcoz.dc.gov)*
- *The OZ refers the application to OP*
- *OP files a report with the Zoning Commission with a recommendation on whether the application is ready to be set down for a public hearing*
- *OZ advertises the public hearing and notifies the affected Advisory Neighborhood Commission (ANC)*
- *Applicant typically presents the proposal to the ANC prior to the ANC making a recommendation to the ZC*
- *Applicant files any additional material not later than 20 days before the public hearing*
- *Public hearing is held*
- *Zoning Commission takes proposed action and refers it to the National Capital Planning Commission (NCPC) for consideration of federal interest*
- *Zoning Commission takes final action and issues a final order*

For more information contact:

DC Office of Zoning
(202) 727-6072
dcoz@dc.gov

7. RISK OF LOSS

As of the date of conveyance, the Purchaser shall assume all responsibility for care and handling and all risks of loss or damage to the Property, including but not limited to all buildings and other improvements located thereon, and assume all obligations and liabilities of ownership and no claim for any allowance or deduction upon such grounds will be considered after the conclusion of an auction.

8. TAXES, ASSESSMENTS AND OTHER COSTS

As of the date of conveyance, the Purchaser shall assume responsibility for all general and special real and personal property taxes or other assessments which have been or may be assessed on the Property, and for all sums due to be paid by the Government in lieu of taxes, which amount shall be prorated.

9. REVOCATION OF BID AND DEFAULT

In the event of revocation of a bid after the conclusion of an auction, but prior to acceptance of the high bid by the Government, or in the event of revocation of a bid after notice of acceptance, or in the event of any default by the Purchaser in the performance of the contract of sale created by such acceptance, or in the event of failure by the Purchaser to consummate the transaction, the Purchaser agrees that the deposit paid the Government in any acceptable form, including credit card, together with any payments subsequently made on account, may be forfeited at the option of the Government as damages for breach of contract, in which event the Purchaser shall be relieved from further liability. Otherwise, without forfeiting the said deposit and payments, the Government may avail itself of any legal or equitable rights which it may have under the bid or contract of sale.

10. GOVERNMENT LIABILITY

If the Government accepts a bid for the purchase of the Property and (1) the Government fails for any reason to perform its obligations as set forth herein; or (2) title does not transfer or vest in the Purchaser for any reason, although Purchaser is ready, willing, and able to close; or (3) any other contractual claim or cause of action hereafter accrues in favor of Purchaser under the terms of this IFB, the Government's

liability to Purchaser shall be strictly limited to all amounts of money Purchaser has paid to the Government without interest whereupon the Government shall have no further liability to Purchaser.

11. TITLE EVIDENCE

Any bidder, at its sole cost and expense, may procure any title evidence that the said bidder desires. The Government will, however, cooperate with the Purchaser or their authorized agent in this transaction, and will permit examination and inspection of such deeds, abstracts, affidavits of title, judgments in condemnation proceedings, or other documents relating to the title of the premises and Property involved, as it may have available. It is understood and agreed that the Government is not obligated to pay for any expense incurred in connection with title matters or survey of the Property.

12. TITLE

If a bid for the purchase of the Property is accepted, a quitclaim deed or a deed without warranty in conformity with local law and practice will convey the Government's interest. The Government does not pay for or provide title insurance.

13. EASEMENTS, ENCROACHMENTS AND RESERVATIONS

The Property will be sold subject to any and all covenants, reservations, easements, restrictions, encroachments, and rights, recorded or unrecorded, in favor of third parties, for highways, streets, power lines, telephone lines and equipment, pipelines, drainage, sewer and water mains and lines, public utilities, public roads, railroads and other rights-of-way, and any easements, reservations, rights and covenants reserved by the Grantor herein.

14. COVENANT AGAINST CONTINGENT FEES

The Purchaser warrants that he or she has not employed or retained any person or agency to solicit or secure this contract upon any agreement or understanding for commission, percentage, brokerage, or contingent fee. Breach of this warranty shall give the Government the right to annul the contract without liability or in its discretion to recover from the Purchaser the amount of such commission, percentage, brokerage, or contingent fee in addition to the consideration herewith set forth. This warranty shall not apply to commissions payable by the Purchaser upon the contract secured or made through bona fide established commercial agencies maintained by the Purchaser for the purpose of doing business. “Bona fide established commercial agencies” has been construed to include licensed real estate brokers engaged in the business generally.

15. TENDER OF PAYMENT AND DELIVERY OF INSTRUMENT OF CONVEYANCE

The closing date of the sale is one hundred (100) calendar days after acceptance of the bid. Upon agreement by the Government, the Purchaser may close the transaction prior to the one hundred (100) calendar day period.

Prior to closing, the Purchaser or Purchaser’s agent may open an escrow account with an independent, unaffiliated escrow company (“Escrow Holder”) to handle the closing. The Government does not mandate use of an escrow company. All closing costs, including escrow fees and document handling expenses, shall be borne solely by the Purchaser. As part of the closing, the Government will provide escrow instructions to the Escrow Holder regarding the recording, disposition of proceeds and related matters.

On the closing date, the Purchaser shall tender to the Government (or to the Escrow Holder) the balance of the purchase price in the form of a cashier’s check, certified check or electronic wire transfer. Upon confirmation that Purchaser’s wire transferred funds have been received by the Government or that Purchaser’s funds by check have been confirmed to the satisfaction of the Government, the Government

shall deliver to the Purchaser the instrument, or instruments, of conveyance. Possession of the Property will be assumed by the Purchaser at the time of closing. The Government reserves the right to extend the closing date for a reasonable amount of time.

16. DELAYED CLOSING

Any change to the established closing date is subject to the written approval by the Government. The Government reserves the right to refuse a request for extension of closing. However, if the Government grants an extension, the Purchaser may be required to pay either: (i) a liquidated damages assessment of $1000.00 per day; or (ii) interest on the outstanding balance of the purchase price, whichever is greater, if the closing of the sale is delayed, and the delay is caused, directly or indirectly, by the Purchaser's action or inaction and not by any action on the part of the Government. The interest rate shall be computed based on the yield of 10-year United States Treasury maturities as reported by the Federal Reserve Board in "Federal Reserve Statistical Release H.15" plus 1-1/2% rounded to the nearest one-eighth percent (1/8%) as of the date of bid acceptance. The Government may impose additional terms and conditions to grant an extension.

17. CLOSING COSTS, DOCUMENTARY STAMPS AND COST OF RECORDING

All closing costs, including escrow and financing fees, shall be borne solely by the Purchaser. The Purchaser shall pay all taxes and fees imposed on this transaction and shall obtain at Purchaser's own expense and affix to all instruments of conveyance and security documents such revenue and documentary stamps as may be required by Federal, state and local law.

All instruments of conveyance and security documents shall be placed on record in the manner prescribed by local recording statutes at the Purchaser's expense.

A conformed copy of the recorded quitclaim deed shall be provided by the Purchaser to GSA, within five (5) business days after recording, at the following address:

U.S. General Services Administration
Real Property Utilization and Disposal Division (WPTZ)
301 7th Street, SW, Room 7709
Washington, DC 20407
Attn: Tim Sheckler

18. OFFICIALS NOT TO BENEFIT

No member or delegate to the Congress, or resident commissioner shall be admitted to any share or part of the contract of sale or to any benefit that may arise therefrom, but this provision shall not be construed to extend to the contract of sale if made with a corporation for its general benefit. GSA employees are prohibited from bidding on the Property offered in the IFB.

19. ANTITRUST LAWS

The contract made by the acceptance of bid by the Government may be transmitted to the Attorney General of the United States for advice as to whether the sale would tend to create or maintain a situation inconsistent with anti-trust laws. The Government may rescind the acceptance of any bid, in case unfavorable advice is received from the Attorney General, without liability on the part of the Government other than to return any and all deposits held by the Government without interest.

INSTRUCTIONS TO BIDDERS

1. AUCTION START DATE

The auction opens on January 18, 2013 at 9:00 a.m. (Central Time).

2. TYPE OF SALE

This sale will be an online auction conducted at RealEstateSales.gov. The auction will be conducted over a period of time, usually several weeks, as determined by bid activity. The date of the auction close (see Paragraph 10, Auction Close) will be announced at RealEstateSales.gov, with at least three business days prior notice. The auction may continue beyond that date as long as bidders continue to submit higher bids. Thus, the bidders determine when the sale closes by their bidding activity.

3. BIDS AND TERMS OF SALE

Bids to purchase must be ALL-CASH. Buyers are expected to arrange their own financing and to pay the balance in full by the closing date. No Government credit terms are available. GSA has no information on the availability of private financing or on the suitability of this Property for financing.

4. STARTING BID

This auction is being opened with an amount which does not represent the value of the Property but rather provides a reasonable starting point for the online auction. The starting bid will be displayed as the Current Bid. The Government seeks to obtain fair market value for the Property and reserves the right to reject any and all bids.

5. BIDDER REGISTRATION AND DEPOSIT

i. Bidder registration is a three-step process:

(1) Complete Online Registration: Bidders must register online at RealEstateSales.gov. Click on "Register", establish a Username and Password and provide the requested account information. A Username and Password are used to register online and to place bids. The required password must be between six and fifteen characters. You will be asked to read and agree to the terms and conditions of the Website. GSA reserves the right to change the online terms and conditions. A previously registered bidder of GSAAuctions.gov can login using the established Username and Password. In the event you forget your Username or Password, or both, or are locked out from the system, it is your responsibility to obtain your Username and Password from RealEstateSales.gov. GSA staff cannot assist in retrieving a lost or forgotten Username or Password.

You may register as either an individual or as a company and this information must be the same information provided on the Bidder Registration and Bid Form for Purchase of Government Real Property. Changes to title may be considered after award at the discretion of the Government. If you wish to participate as an individual and a representative of a company, you must register separately for each and place bids accordingly.

In accordance with Public Law No. 104-134, Section 31001, the Debt Collection Improvement Act of 1996, the Tax Identification Number (TIN) must be provided by anyone conducting business with the Federal Government, from which a debt to the Government may arise. Individuals cannot successfully register to bid on items without providing a TIN. A TIN is defined as an individual's Social Security Number (SSN) or business entity's Employer Identification Number (EIN). If you registered as an Individual, your SSN will be validated with your name and address. If you registered as a Company, your business identity's EIN will be validated with your company name and address. The use of an individual's

SSN is subject to the Privacy Act of 1974 (5 U.S.C. Section 552a), and will be collected only to verify the data submitted by the user and for the proper refund of the Registration Deposit.

A credit card validation process will be conducted to prevent potential fraudulent bidding activity and to ensure that bidders are prepared to accept responsibility for their bidding activity and all submitted bids are valid. The credit card information you provide at registration is used strictly for validation purposes. GSA Auctions® does not automatically charge credit cards on file. Credit card bid deposits for real property sales cannot be made via GSA Auctions®.

For more information and assistance on the online registration process, please go to https://gsaauctions.gov/html/help/index.html.

(2) Complete Registration Form: Bidders must complete and submit the official Bid Form titled "Bidder Registration and Bid Form for Purchase of Government Real Property" accompanying this IFB. All information and certification requested thereon must be provided. Bidder registration and bids submitted which fail to furnish all information or certifications required may be summarily rejected. The Bid Form should be filled out legibly with all erasures, strikeovers and corrections initialed by the person signing the bid. The Bid Form must be signed and dated. Additional bid forms are available upon request or you may photocopy the form in this IFB.

(3) Provide Registration Deposit: A deposit in the amount of $500,000.00 (the “Registration Deposit”). must accompany your Bidder Registration and Bid Form. Registration Deposits must be provided in the form of a cashier's check or certified check. Personal or company checks are NOT acceptable and will be returned to the sender. Checks must be made payable to: “U.S. General Services Administration.” .

Only upon verification of your Registration Deposit, will you be allowed to bid.

b. To complete the bidder registration process, please submit the completed Bidder Registration and Bid Form for Purchase of Government Real Property, along with the required Registration Deposit to:

U.S. General Services Administration
Real Property Utilization and Disposal (WPZ)
301 7TH Street, SW, Room 7709
Washington, DC 20407
Attn: Tim Sheckler
Fax: 202.205.5295
Email: tim.sheckler@gsa.gov

c. It is the responsibility of the bidder to ensure that adequate time is available to complete the registration process as described above. The Government makes no representation or guarantee that any additional assistance or time will be provided to complete the registration process. No bidder will be allowed to participate in the sale until the entire registration process is complete.

d. Registration may occur any time prior to the conclusion of the auction. The Government, however, makes no representation or guarantee that your registration will be completed prior to the announced date and time for the receipt of final bids. Therefore, bidders are encouraged to register before the auction opens.

6. BIDDING IN GENERAL

a. Registered bidders may bid online by following the instructions at RealEstateSales.gov. By submitting your bid through RealEstateSales.gov, you agree that your bid is a binding offer. You will be legally obligated for any and all bids submitted using your Username and password.

After successful completion of the registration process, users, also known as "Bidders," are permitted to participate in online auctions. The Bidder Menu provides you with the capability to browse and place

bids; track items of interest; follow auctions where bids have been placed; to change your personal information and settings; and to access an easy-to-use online Help Menu.

GSA Auctions® provides up-to-date information on your bidding status. You can check the bidding status by clicking on the Bid History.

b. Bids received through RealEstateSales.gov are date and time stamped Central Time. The Government will not be responsible for any discrepancies between the time indicated on the Website and the apparent time indicated, displayed, or otherwise stated or represented by a registered bidder.

c. Bids must be submitted without contingencies.

d. Bidders that are currently in default status on GSAAuctions, for non-payment or non-removal of items, will not be allowed to place bids for real property. They will only be allowed to "browse" the items. Once a bidder cures their default, they will be unblocked and be given access to begin bidding on items upon receipt of the required Registration Deposit. For more information, review the GSAAuctions Terms and Conditions.

7. CONTINUOUS BIDDING RESULTS AND AUCTION INFORMATION

Bidders are strongly encouraged to monitor bidding activity at RealEstateSales.gov. Bidders may also review bid activity by clicking on the “My Messages” tab once logged in. New bids are immediately posted at RealEstateSales.gov upon receipt. If you no longer have the high bid and the sale has not closed, you can go back to the item and place another bid. Bids cannot be lowered or canceled.

If your bid is not accurately shown on RealEstateSales.gov, then you should call GSA at (202) 205-2127 or (202) 401-5806. Bidders are urged to pay close attention to RealEstateSales.gov which will contain new, revised, and useful information regarding the high bid, modification to bid increment and the closing date of the auction.

8. ONLINE BIDDING

RealEstateSales.gov allows you to place a either a flat or automatic (“proxy”) bid. A flat bid is for an amount equal to at least the current bid plus the posted minimum Bid Increment. If the bid is greater than another bidder’s automatic bid, the system will consider this flat bid as the current (winning) bid. If the bid is less than or equal to another bidder’s automatic bid, the system will record the bid but it will not be considered the current (winning) bid. The required minimum bid will be specified on the bid screen and once entered it will be displayed as the winning bid unless an automatic bid that is greater than this amount has been placed.

An automatic bid is an amount that you set above the posted minimum bid. Realestatesales.gov will use as much of your bid as needed to make you the current winner of the auction or to meet the auction’s reserve price. The system will automatically apply the minimum Bid Increment up to the total amount bid to make you the current winner of the auction or to meet the auction's reserve price. Your automatic bid amount is not shown to other bidders until it is reached through competitive bidding. You may change your bid amount but not less than the next bid increment amount. If the system reaches your automatic bid limit, it stops bidding for you. Submit another bid if you want to continue bidding. If you selected to receive e-mail notifications during registration, the system will notify you if you are no longer holding the winning bid. You can submit another flat bid or reset your automatic bid amount if you want to continue bidding. Your automatic bid is not shown to other bidders. If a reserve price is set, RealEstateSales.gov will use as much of your bid as needed to meet the reserve price.

When two automatic bids compete, the greater of the two always wins. If the greater automatic limit does not exceed the lesser automatic limit by the full stated Bid Increment, then the greater automatic limit bid is placed. You may increase or decrease your automatic bid limit at any time. You cannot decrease your

automatic bid below the current bid. If you are currently the winner in an auction, increasing your automatic bid will not increase your current bid until challenged by another bid. Changing your automatic bid may affect the indicated time remaining.

If you learn from RealEstateSales.gov that your bid was not the high bid, or if another bidder exceeds your previous high bid, you may increase your bid at RealEstateSales.gov until such time as bidding is closed. Increases in previously submitted bids are welcome and your Registration Service Fee will apply to subsequent increased bids. All increased bids must be made online. **The Government reserves the right to modify the Bid Increment at <u>any time</u> prior to the close of the auction.**

9. TRANSMISSION AND RECEIPT OF BIDS

The Government will not be responsible for any failure attributable to the inability of the bidder to transmit or the Government to receive registration information, bid forms or a bid by any method. Failure to receive registration information, bid forms or a bid may include, but is not limited to the following:

a. Receipt of a garbled or incomplete bid.

b. Availability or condition of the sending or receiving electronic equipment.

c. Incompatibility between the sending and receiving equipment and software.

d. Malfunctioning of any network, computer hardware or software.

e. Delay in transmission or receipt of a bid.

f. Failure of bidder to properly identify the bid.

g. Security of bid data.

h. Inability of bidder to enter bid. For example: due to lost or forgotten password or system lock due to repeated login failures.

i. Unavailability of GSA personnel.

If your bid is not accurately shown or you cannot enter a bid at RealEstateSales.gov then you should call GSA at (202) 205-2127 or (202) 401-5806 for assistance.

The Website will NOT be available during the following system maintenance windows:

- Saturday: 5:00 a.m. to 8:00 a.m. CT
- Sunday: 6:00 a.m. to 10:00 a.m. CT

The Website may NOT be available during the following system maintenance window:

- Wednesday: 5:00 a.m. to 6:30 a.m. CT

Occasionally, technical problems will interrupt the bidding process for an unspecified amount of time. These interruptions may affect some or all bidders. In the event of an interruption, an evaluation of the length of interruption time and the numbers of bidders affected may prompt GSA Auctions℠ to extend the closing time for an auction. Extension may range from 1 hour to 24 hours based on the aforementioned criteria, to ensure fair and full competition. An email notification will be sent to those bidders who participated in these auctions when they are extended.

10. AUCTION CLOSE

The Government will announce a date and time for the Close Time on RealEstateSales.gov. The Government will also set a Bid Interval or "challenge" period for bids. The Time Remaining countdown clock announces the time left to bid. The High Bid must survive the Bid Interval without challenge, usually within 24 hours of the auction close time, to win. If the High Bid on the announced date and time survives the full Bid Interval period without challenge, then bidding will close at the stated time and consideration for award will be given to the High Bidder.

If an increased bid is received within the Time Remaining and the Bid Interval is 24 hours, then bidding will be held over for an additional Bid Interval (including weekends and Federal holidays) beginning at the time the increased bid is placed. This process will continue until the high bid survives the full Bid Interval period unchallenged. Bid Intervals may be changed from 24 hours (reduced or increased) as determined by the Government. For Bid Intervals of less than 24 hours, the auction will not close during non-business hours, weekends or Federal holidays and the bidding will continue to the next business day. **The Government reserves the right to increase or decrease the Bid Interval at <u>any time</u> prior to the close of the auction.** Bidder agrees that notices of changes to the sale are satisfactory when made available on the website at RealEstateSales.gov.

11. CONTINUING OFFERS

Each bid received shall be deemed to be a continuing offer for one hundred (100) calendar days after the close of the online auction until the bid is accepted or rejected by the Government.

If the Government desires to accept any bid after the expiration of the one hundred (100) calendar days, the consent of the bidder shall be obtained prior to such acceptance.

12. ACCEPTABLE BID

An acceptable bid is one received from a responsible bidder, whose bid, conforming to this IFB, will be most advantageous to the Government.

13. BID EXECUTED ON BEHALF OF BIDDER

A bid executed by an attorney or agent on behalf of the bidder shall be accompanied by an authenticated copy of their Power of Attorney or other evidence of their authority to act on behalf of the bidder.

If the bidder is a corporation, the Certificate of Corporate/Organization Bidder, included in this IFB, must be executed. The certificate must be executed under the corporate seal by a duly authorized officer of the corporation other than the officer signing the bid. In lieu of the Certificate of Corporate Bidder, there may be attached to the bid, copies of so much of the records of the corporation as will show the official character and authority of the officer signing, duly certified by the secretary or assistant secretary, under the corporate seal, to be true copies.

If the bidder is a partnership, and all partners sign the bid, with a notation that they are all general partners, the Government will not ordinarily require any further proof of the existence of the partnership. If all the partners do not sign the bid, then the names of all those except limited partners must be furnished on the bid and the Government, in its discretion, may require evidence of the authority of the signer(s) to execute the bid on behalf of the partnership. The name(s) and signature(s) of the designated bidder(s) must be included on the Bidder Registration and Bid Form.

If the bidder is a limited liability company, a certificate of the LLC must be completed and executed by the manager and submitted with the Bidder Registration Form. The Certificate of Corporate/Organization Bidder form may be used for this purpose.

14. NOTICE OF ACCEPTANCE OR REJECTION

Notice by the Government of acceptance or rejection of the bid shall be deemed to have been sufficiently given when faxed or mailed to the bidder or their duly authorized representative at the fax/phone number or address indicated in the bid. The processing of a bid deposit by the Government shall not, in itself, constitute acceptance of the bidder's offer. The Government reserves the right to reject any or all bids or portions thereof for any reason.

15. AUCTION SUSPENSION OR CANCELLATION

The Government reserves the right to temporarily suspend or cancel the auction for any reason without award and resume the auction or start a new auction at any time. In the event of a temporary suspension due to technical problems, or other bidding issues, the Government will determine the high bidder and the high bid amount, re-open bidding and allow the auction to proceed according to the bidding terms described herein. The Government reserves the right to cancel the sale at any time and Registration Deposits will be returned to bidders without interest or further obligation by the Government.

16. TEN PERCENT BID DEPOSIT AND TRANSACTION CLOSING

Within ten (10) business days of acceptance of a bid by the Government, the Purchaser agrees to deposit an additional amount, if required, in the form of a certified check or cashier’s check, if any, which when added to the Registration Deposit, will equal at least ten percent (10%) of the total bid. Failure to provide these funds will result in a default and forfeiture of the Registration Deposit.

Upon acceptance of a bid, the bid deposit shall be applied towards payment of the Purchaser's obligation to the Government. The full balance of the purchase price in the form of a certified check, cashier’s check or electronic wire transfer is payable within one hundred (100) calendar days after acceptance of bid. At the time of closing, all monies paid by the Purchaser will be credited, without interest, toward the total purchase price.

17. REFUND OF REGISTRATION DEPOSITS

Registration Deposits accompanying bids that are rejected will be refunded to bidders without interest.

Registration Deposits received from the second highest bidder will be held as stipulated in Paragraph 18, Back-up Bidder. All other Registration Deposits will be processed for refunds after the last day of the auction or upon written request to withdraw from the auction unless the bidder is the first or second highest bidder.

18. BACKUP BIDDER

The second-highest bidder will be the Backup Bidder. The Backup Bidder may be considered for award as the successful bidder for the duration of Continuing Offer period described in Paragraph 11, Continuing Offers, if: 1) the original High Bidder is unable to fully complete the transaction according to the terms and conditions of the IFB; or 2) if the original High Bidder fails to increase its initial bid deposit to the required 10% of the purchase price. The Backup Bidder’s Registration Deposit may be retained, at the Government’s discretion, without interest, until the High Bidder either provides the 10% bid deposit or completes the transaction. When the Backup Bidder is converted to the High Bidder, all terms, conditions and agreements described in the IFB are applicable to the successful bidder.

The Registration Deposit of the Backup Bidder will be returned as described in Paragraph 17, Refund of Registration Deposits, if the Backup Bidder is not converted to the High Bidder. In the event that the Government is unable to complete the transaction with the highest or backup bidder, the Government reserves the right to consider the remaining bid(s) and make an award that is in the best interest of the Government.

19. ADDITIONAL INFORMATION

GSA will provide additional copies of this IFB and make every effort to answer requests for additional information concerning the Property to facilitate preparation of bids. Each bid shall be deemed to have been made with full knowledge of all terms, conditions, and requirements contained in this IFB and any amendments made thereto prior to bid acceptance. Bidders may also review the information pertaining to the Property at https://propertydisposal.gsa.gov or RealEstateSales.gov.

20. WAIVER OF INFORMALITIES OR IRREGULARITIES

The Government may, at its election, waive any minor informality or irregularity in bids received.

NOTICES AND COVENANTS

The following Notice and Covenants will be inserted in the Quitclaim Deed.

HAZARDOUS SUBSTANCE NOTIFICATION

Bidders are put on notice that soil and groundwater contamination exist on the Property as a result predominantly of past activities conducted on the land and adjoining land areas, some of which are potentially attributable to the United States. Soil contaminants include barium, chromium, lead, mercury, total petroleum hydrocarbons (TPH), acetone, benzo(a)anthracene, benzo(b)fluoranthene, benzo(g,h)perylene, benzo(a)pyrene, benzo(k)fluoranthene chrysene, fluoranthene, indeno(1,2,3-c,d)pyrene, phenanthrene, pyrene, in addition to arsenic which is largely attributable to background conditions, and groundwater contaminants include arsenic, barium, chromium, lead, mercury, and acetone.

The presence of these contaminants was revealed in a Phase II Environmental Site Assessment dated July14, 2010 that included soil and groundwater sampling. This sampling indicated that soil contamination was such that the presence of benzo(a)pyrene and arsenic was detected in amounts in excess of what is acceptable for an industrial use of the property. It also indicated that groundwater was contaminated by arsenic, chromium, lead, and mercury at levels that exceeded DC Municipal Regulations. However, a subsequent Human Health Risk Assessment (HHRA) dated October 28, 2011 that focused on the issue of soil contamination did conclude that, where they were detected, the benzo(a)pyrene and arsenic levels, as well as other detected contaminants including Volatile Organic Compounds (VOCs) were within acceptable parameters not only for industrial use, but unrestricted uses as well. Because there were potential risks posed to human health by contamination in the form of VOCs entering structures (current or future structures) by vapor intrusion pathways, the HHRA also indicated that any development of the property be informed by the risk of vapor intrusion.

a. Notice Regarding Hazardous Substance Activity. Pursuant to 40 CFR 373.2 and Section 120(h)(3)(A)(i) of the Comprehensive Environmental Response, Compensation and Liability Act of 1980, as amended (CERCLA) (42 U.S.C. §9620(h)(3)(A)(i)), and based upon a complete search of agency files, the United States gives notice that certain hazardous substances have been released or disposed of or stored for one year or more on the Property.

Based on the results from the Phase II and HHRA, therefore, the Property will be conveyed subject to the following:

(i) Bidders and their assigns and successors, are hereby notified that barium, chromium, lead, mercury, TPH, acetone, benzo(a)anthracene, benzo(b)fluoranthene, benzo(g,h)perylene, benzo(k)fluoranthene chrysene, benzo(a)pyrene, fluoranthene, indeno(1,2,3-c,d)pyrene, phenanthrene, pyrene, may have been released on the property, some of which are characterized as volatile organic compounds. These releases have the potential of being sources of contamination that, when accumulated within structures, are characterized as forms of “vapor intrusion” by various Federal and State environmental regulatory agencies and environmental consensus standard organizations. In particular:

- the U.S. Environmental Protection Agency, Office of Solid Waste and Emergency Response, has published draft guidance entitled “OSWER Draft Guidance for Evaluating the Vapor Intrusion to Indoor Air Pathway from Groundwater and Soils”;

- the Interstate Technology and Regulatory Council has a vapor intrusion team in place which has, in turn, developed guidance for its member States on how to address the risks posed by vapor intrusion, including:

-- VI-1 – Vapor Intrusion Pathway: A Practical Guideline, and

-- VI-1A – Vapor Intrusion Pathway: Investigative Approaches for Typical Scenarios

- the American Society for Testing and Materials (ASTM) established a task group entitled ASTM E 50.02.06 to develop a standard to assess vapor intrusion as it relates to property transactions, and has published a ASTM E2600 – 10, a Standard Guide for Vapor Encroachment Screening on Property Involved in Real Estate Transactions, obtainable at this website:

http://www.astm.org/Standards/E2600.htm.

The levels of these VOCs, whether present in either underlying soils or groundwater or both, have been determined, in their current state and in light of the current state of property use, to not be actionable by Federal and State environmental regulatory authorities. Nonetheless, Bidders are placed on notice that based on current scientific understanding of the risks associated with volatile chemical vapor intrusion, it is possible that future development on the property that involves the alteration of current structures or creation of new structures, may provide a preferential pathway for such volatile chemicals, and thus may require consideration of construction methods to limit or prevent such intrusions.

Should such construction methods be undertaken by the Bidder, its assigns or successors, the costs of addressing such intrusion shall be borne exclusively by the Bidder and its assigns or successors, and not the United States. Furthermore, the determination to pursue methodologies to reduce the potential for vapor intrusion is not within the scope of releases that would make a response action necessary under CERCLA Sec. 120(h)(3)(A).

ii. A deed restriction indicating that Grantee (which term includes Grantee's successors and assigns) is prohibited from using the groundwater located below the surface of the Property. Furthermore, ownership of the groundwater is being retained by the Government. Should the Grantee desire to undertake a cleanup of the groundwater to allow for use of said groundwater, or to establish that a restriction on use is no longer necessary (in whole or in part) it will seek permission from Federal and District of Columbia regulators to undertake such an action or study. Should permission for such an undertaking be granted, upon completion of the proposed action by the Grantee that is satisfactory to the Government, such restrictions will be lifted or modified and the groundwater interests (in whole or in part) will be conveyed to the Bidder. All costs associated with conducting such a proposed action shall be borne exclusively by the Bidder and its assigns or successors, and not the United States. Furthermore, conducting such a proposed action is not within the scope of releases that would make a response action necessary under CERCLA Sec. 120(h)(3)(A). Further, in accordance with guidance received from the District of Columbia Department of the Environment, Grantee is hereby notified that (i) comprehensive site characterization and site-specific risk evaluation may need to be carried out to support the intended use of the Property and (ii) data gaps exist with respect to site characterization in the context of a redevelopment scenario.

b. CERCLA Covenant. Subject to the premises of (a)(i) and (a)(ii) above, Grantor warrants that all remedial action necessary to protect human health and the environment has been taken before the date of this conveyance. Grantor warrants that it shall take any additional response action found to be necessary after the date of this conveyance regarding hazardous substances located on the Property on the date of this conveyance.

1) This covenant shall not apply:

(a) in any case in which Grantee, its successor(s) or assign(s), or any successor in interest to the Property or part thereof is a Potentially Responsible Party (PRP) with respect to the Property immediately prior to the date of this conveyance; OR

(b) to the extent that such additional response action or part thereof found to be necessary is the result of an act or failure to act of the Grantee, its successor(s) or assign(s), or any party in possession after the date of this conveyance that either:

(i) results in a release or threatened release of a hazardous substance that was not located on the Property on the date of this conveyance; OR

(ii) causes or exacerbates the release or threatened release of a hazardous substance the existence and location of which was known and identified to the applicable regulatory authority as of the date of this conveyance.

2) In the event Grantee, its successor(s) or assign(s), seeks to have Grantor conduct any additional response action, and, as a condition precedent to Grantor incurring any additional cleanup obligation or related expenses, the Grantee, its successor(s) or assign(s), shall provide Grantor at least 45 days written notice of such a claim. In order for the 45-day period to commence, such notice must include credible evidence that:

(a) the associated contamination existed prior to the date of this conveyance; and

(b) the need to conduct any additional response action or part thereof was not the result of any act or failure to act by the Grantee, its successor(s) or assign(s), or any party in possession.

c. Access. Grantor reserves a right of access to all portions of the Property for environmental investigation, remediation or other corrective action. This reservation includes the right of access to and use of available utilities at reasonable cost to Grantor. These rights shall be exercisable in any case in which a remedial action, response action, or corrective action is found to be necessary after the date of this conveyance, or in which access is necessary to carry out a remedial action, response action, or corrective action on adjoining property. Pursuant to this reservation, the United States of America, and its respective officers, agents, employees, contractors, and subcontractors shall have the right (upon reasonable advance written notice to the record title owner) to enter upon the Property and conduct investigations and surveys, to include drilling, test-pitting, borings, data and records compilation and other activities related to environmental investigation, and to carry out remedial or removal actions as required or necessary, including but not limited to the installation and operation of monitoring wells, pumping wells, and treatment facilities. Any such entry, including such activities, responses or remedial actions, shall be coordinated with record title owner and shall be performed in a manner that minimizes interruption with activities of authorized occupants.

NOTICE OF PRESENCE OF LEAD-BASED PAINT (LBP)

The Purchaser of any interest in real property on which a building was built prior to 1978 is notified that such property may present exposure to lead from lead-based paint that may place young children at risk of developing lead poisoning. Lead poisoning in young children may produce permanent neurological damage, including learning disabilities, reduced intelligence quotient, behavioral problems, and impaired memory. Lead poisoning also poses a particular risk to pregnant women. The seller of any interest in residential real property is required to provide the buyer with any information on lead-based paint hazards from risk assessments or inspections in the seller's possession and notify the buyer of any known lead-based paint hazards. A risk assessment or inspection for possible lead-based paint hazards is recommended prior to converting the Property to a residential dwelling.

ASBESTOS CONTAINING MATERIALS

a. Bidders are warned that the Property contains asbestos-containing materials. Unprotected or unregulated exposures to asbestos in product manufacturing, shipyard, and building construction workplaces have been associated with asbestos-related diseases. Both the Occupational Safety and Health Administration (OSHA) and the Environmental Protection Agency (EPA) regulate asbestos

because of the potential hazards associated with exposure to airborne asbestos fibers. Both OSHA and EPA have determined that such exposure increases the risk of asbestos-related diseases, which include certain cancers and which can result in disability or death.

b. Bidders are invited, urged, and cautioned to inspect the Property to be sold prior to submitting a bid. More particularly, bidders are invited, urged, and cautioned to inspect the Property as to its asbestos content and condition, and any hazardous or environmental conditions relating thereto. The Government will assist bidders in obtaining any authorization(s) which may be required in order to carry out any such inspection(s). Bidders shall be deemed to have relied solely on their own judgment in assessing the overall condition of all or any portion of the Property including, without limitation, any asbestos hazards or concerns.

c. No warranties either express or implied are given with regard to the condition of the Property including, without limitation, whether the Property does or does not contain asbestos or is or is not safe for a particular purpose. The failure of any bidder to inspect, or to be fully informed as to the condition of all or any portion of the Property offered, will not constitute grounds for any claim or demand for adjustment or withdrawal of a bid or offer after its opening or tender.

d. The description of the Property set forth in this IFB and any other information provided therein with respect to said Property is based on the best information available to the disposal agency and is believed to be correct, but an error or omission, including but not limited to the omission of any information available to the agency having custody over the Property and/or any other Federal agency, shall not constitute grounds or reason for nonperformance of the contract of sale, or any claim by the Purchaser against the Government including, without limitation, any claim for allowance, refund, or deduction from the purchase price.

e. The Government assumes no liability for damages for personal injury, illness, disability or death, to the Purchaser, or to the Purchaser's successors, assigns, employees, invitees, licensees, or any other person subject to Purchaser's control or direction, or to any other person, including members of the general public, arising from or incident to the purchase, transportation, removal, handling, use, disposition, or other activity causing or leading to contact of any kind whatsoever with asbestos on the Property which is the subject of this sale, whether the Grantee, its successors or assigns has or have properly warned or failed properly to warn the individual(s) injured.

f. The Grantee further agrees that in its use and occupancy of the Property it will comply with all Federal, state, and local laws relating to asbestos.

NAVIGABLE AIRSPACE

Based upon coordination between the General Services Administration and the Federal Aviation Administration (the "FAA") as recommended in House Report Number 95-1053 entitled "FAA Determination of 'No Hazard' for Structures Near Airports," it has been determined that a public airport is located within six nautical miles of the Property. To the extent required by law, the Grantee, its successors and assigns must comply with Title 14, Code of Federal Regulations, Part 77, "Objects Affecting Navigable Airspace," of the Federal Aviation Act of 1958, as amended. This restriction shall run with the Property.

HISTORIC AND CULTURAL PRESERVATION COVENANT

For the West Heating Plant, GSA will place covenants in the deed of sale requiring the owner to (i) obtain the approval of the SHPO for their development plans; (ii) comply with applicable local historic preservation law; and (iii) devise plans that are consistent with the Secretary of the Interior’s Standards for the Treatment of Historic Properties with Guidelines for Rehabilitating Historic Buildings. Prior to effectuating the deed of sale, GSA and the State Historic Preservation Officer will confirm the covenants with the purchaser while ensuring acceptable compliance with the provisions that follow.

The covenants are proposed to be substantially in the form enclosed herein:

BY ACCEPTANCE OF THIS DEED, consistent with 36 CFR 800.5(a)(2)(vii) and in fulfillment of Grantor's responsibilities to provide adequate and legally enforceable restrictions or conditions to ensure the long-term preservation of the West Heating Plant (Property), Grantee acknowledges that the West Heating Plant is individually eligible for listing in the National Register of Historic Places and the District of Columbia Inventory of Historic Sites, and a contributing structure in the Georgetown Historic District National Historic Landmark. Grantee further acknowledges that any alteration, restoration, rehabilitation, demolition, modification, or any development or new construction involving the Property may have an effect on the Property's historic integrity and significance as reasonably determined by the District of Columbia State Historic Preservation Officer (SHPO) in consultation with the Grantee. In confirmation thereof, Grantee covenants for itself, its successors and assigns and every successor-in-interest to all or any portion of the Property, that the Property is conveyed, subject to the following covenants, conditions, restrictions, and limitations (collectively, the Historic Preservation Covenants), which are covenants running with the land and which Historic Preservation Covenants shall bind all future owners thereof with the same force and effect as if all such future owners had by express agreement in writing assumed to perform and observe all of said Historic Preservation Covenants, while such owners. It is expressly understood and agreed that all of the Historic Preservation Covenants relate to any alteration, restoration, rehabilitation, demolition, or modification of any building or improvements associated with Property, and to the design and construction or alteration of any new building or improvements on the Property that may affect a character-defining feature of the building as identified in GSA's 2012 Determination of Eligibility and that the SHPO may reasonably deem necessary to retain in order to preserve the integrity of the Property when rehabilitated for a new use:

(1) any alteration, restoration, rehabilitation, demolition, or modification of existing structures on the Property, and any development or new construction in the Property, shall be in compliance with applicable local historic preservation law and consistent with the recommended approaches set forth in the applicable sections of the Secretary of the Interior's Standards for the Treatment of Historic Properties with Guidelines for Rehabilitating Historic Buildings (U.S. Department of the Interior, National Park Service, 1992), as the same may be amended from time to time;

(2) any alteration, restoration, rehabilitation, demolition, or modification of existing structures on the Property, and any development or new construction on the Property shall be subject to the prior written approval of the SHPO, which approval shall not be unreasonably withheld, conditioned or denied;

(3) in the event of a violation of any provision of the Historic Preservation Covenants, the SHPO may, following notice to Grantees and a reasonable opportunity to cure, institute suit to enjoin any such violation and obtain any appropriate legal or equitable remedies to require full and immediate compliance with the Historic Preservation Covenants described herein; and

(4) the Historic Preservation Covenants shall be binding in perpetuity; provided, however, that the SHPO may, for good cause, modify or cancel any or all of the Historic Preservation Covenants upon the written request of Grantees.

The acceptance of this Deed shall constitute conclusive evidence of Grantee's agreement to be bound by the Historic Preservation Covenants and to perform the obligations set forth herein.

FLOODPLAIN

Notice is given that the property is located in the 100-year floodplain and is subject to any and all Federal, State, and local laws, rules, and ordinances governing land use in floodplain areas. The DC Department of the Environment (DDOE) is the Floodplain Administrator and National Flood Insurance Program

coordinating agency for the site. Bidders are encouraged to contact DDOE for further guidance regarding floodplain issues.

POLYCHLORINATED BIPHENYLS (PCBS) / MERCURY

The Deed shall contain the "Notice of Presence of Polychlorinated Biphenyls (PCBs) / Mercury" as shown below:

The Property may contain polychlorinated biphenyls (PCBs) resulting from former operations of transformers and light ballasts, and mercury containing gauges. No warranties, either expressed or implied, are given regarding the condition of the Property. The Grantee shall be deemed to have relied solely on its own judgment in assessing the overall conditions of all or any portion of the Property, including any PCB and mercury hazards or concerns.

The Grantor assumes no liability for damages for personal injury, illness, disability, or death to the Grantee or to the Grantee's successors, assigns. Employees, invitees, or any other person subject to Grantee's control or direction, including members of the general public, arising from or incident to purchase, transportation, removal, handling, use, disposition, or other activity causing or leading to contact of any kind whatsoever with PCBs on the Property whether the Grantee has properly warned or failed to properly warn the individuals injured.

The Grantee agrees, by acceptance of this Quitclaim Deed, for itself, its successors and assigns, and each successor in interest to the Property or any portion thereof that, in its use and occupancy of the Property, it will comply with all Federal, state, and local laws pertaining to PCBs and mercury.

EXISTING TELECOMMUNICATION LEASES

The property is currently subject to two telecommunication leases, one with AT&T and one with Cricket. These leases may be terminated by the Government with ninety (90) days notice. The leases / amendments are attached as Exhibit A. The successful high bidder has the option of having the existing leases terminated prior to closing or, subject to the Lessee's consent, having the existing leases assigned to them. When the successful high bidder is issued an award letter by the Government, the successful high bidder will have 7 calendar days in which to notify GSA of their choice to pursue an assignment of the leases or have the government terminate the leases. In the event of an early closing, e.g. closing prior to the termination of the existing leases where the Grantee desires termination of the leases, a pro-rata share of the revenues due to Grantee will be taken into account in calculating the final payment for the property.

ACCESS TO C&O CANAL RETAINING WALL

A reservation for access will be included in the final conveyance instrument. The purpose of this reservation is to allow access to the site by the Department of the Interior, National Park Service for performing inspection, maintenance, or repairs to the stone retaining wall that borders the extreme northern portion of the site as shown in the figure below. The boundary of the offered property excludes said retaining wall, which will remain under the custody and control of the National Park Service.

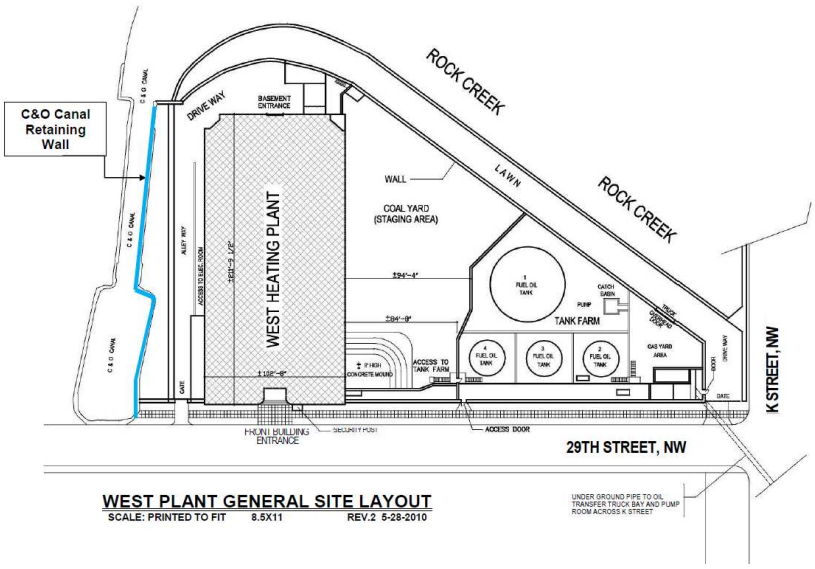

An ALTA survey of the property is available at realestatesales.gov, which more clearly articulates the property boundary along this portion of the site.

MAINTENANCE OF SEAWALL / LANDSCAPING

The Grantee will be required to maintain the structural integrity and cosmetic features of the seawall along Rock Creek within the site boundaries, as well as perform maintenance on any landscaping / plantings that remain in the area between the seawall and the high retaining wall, to the extent that they remain extant following transfer. A map showing the location of the seawall and the areas to be maintained can be seen in Exhibit B.

SEALING OF EXISTING TUNNELS

The West Heating Plant property is currently connected to the GSA steam tunnel network via a steam tunnel emanating from the Southeast corner of the existing building. There is also an underground coal conveyor tunnel that leaves the Southwest portion of the site in the direction of the former Track House (now House of Sweden). The Grantee will seal the steam tunnel with a masonry wall and cap existing pipes in the tunnels as per the general specifications shown in Exhibit C. Design for the work must be submitted to GSA for review and approval prior to initiation of the work. Completion and GSA's acceptance of this work will be a condition precedent to closing. A Right of Entry agreement specific to the sealing of the steam tunnel will be executed after award to allow completion of this work prior to closing.

DOCUMENT BOX

At such time as the building is demolished, if any document box is found, which should be located behind the cornerstone, it shall remain the property of the Government and shall be delivered, unopened to the National Archives and Records Service, Washington, DC.

POST TRANSFER ADVISORY NOTICE

By this notice, GSA informs bidders that **following** GSA's transfer of the property to the grantee, the National Park Service (NPS) is encouraging the grantee to convey to NPS a conservation easement covering the areas outside the high wall adjacent to Rock Creek and the C&O Canal for purposes of maintaining open space and providing public access to Rock Creek and the C&O Canal. A conservation easement may be consistent with the outcome of the local land use review process (see pg 7-9) and provide certain tax advantages to the grantee; bidders are advised to conduct independent due diligence in this regard. Bidders are encouraged to contact NPS for more information related to such an easement. The point of contact for NPS is Brian Woodbury, Regional Chief of Lands (202.619.7034).

BIDDER REGISTRATION AND BID FORM FOR PURCHASE OF GOVERNMENT REAL PROPERTY

West Heating Plant
1051 29th Street, NW
Washington, DC 20007-3821
IFB Number: DC-497-1
REGISTRATION DEPOSIT: $500,000.00

USERNAME: _____
(as established at RealEstateSales.gov)

Bidder Information: Please print or type legibly.

Name: _____

Address: _____

City: _____ State: _____ Zip: _____

Phone: (_____)_____ Fax: (_____)_____

E-mail: _____@_____

BIDDER REPRESENTS THAT HE/SHE OPERATES AS (check which applies) see Page 18, Paragraph 13, Bid Executed on Behalf of Bidder for instructions:

- □ An individual _____
- □ A partnership consisting of _____
- □ A limited liability partnership consisting of _____
- □ A corporation, incorporated in the State of _____
- □ A limited liability company _____
- □ A trustee, acting for _____
- □ Other _____

Registration Deposit (check one):

○ By certified or cashier's check made payable to the **U.S. General Services Administration**
TIN or SS# _____ (please provide to expedite refund)

Certification and Authorization

The undersigned bidder hereby offers and agrees to purchase the Property as described in the accompanying Invitation for Bids (IFB) for the bid price entered above or for increased bids placed online by the undersigned, if this bid is accepted by the Government within Ninety (90) calendar days after the auction close date. This Bid Form is made subject to the terms of IFB No. DC-0497-1 including the Property Description, General Terms of Sale, Instructions to Bidders, Special Terms of Sale, Notices and Covenants, Bidder Registration and Bid Form For Purchase of Government Real Property, Lease, Historic Preservation Memorandum of Agreement, and any associated amendments to the IFB, all of which are incorporated herein and by reference made a part of this initial bid and subsequent bids placed online at RealEstateSales.gov. In the event that bidder becomes the Purchaser, the Registration Deposit will be applied towards the purchase price for the Property. In the event the bidder is not the Purchaser, the Registration Deposit will be refunded to the bidder as specified in the IFB. Information collected herein is governed by the Privacy Act of 1974 (5 U.S.C. Section 552a) and is being collected only to register a bidder for the sale of Government property and to provide a proper refund of the Registration Deposit.

Signature: _____ **Date:** _____

Send Registration Form with Registration Deposit to:

U.S. General Services Administration
Real Property Utilization and Disposal (WPZ)
301 7th Street, NW Washington, DC 20407
Attn: Tim Sheckler

FAX: (202) 205-5295

CERTIFICATE OF CORPORATE/ORGANIZATION BIDDER

(For use with Bidder Registration and Bid Form for Purchase of Government Real Property
see Page 18, Paragraph 13, Bid Executed On Behalf Of Bidder for instructions)

West Heating Plant
1051 29th Street, NW
Washington, DC 20007-3821

I, _____, certify that I am _____
(Secretary or Other Title)

of the Corporation/Organization named as bidder herein; that _____
(Name of Authorized Representative)

who signed this Bid Form for Purchase of Government Property on behalf of the bidder was then

_____ of said Corporation/Organization; that said bid was
(Official Title)

duly signed for and on behalf of said Corporation/Organization by authority of its governing body and is within the scope of its corporate/organization powers.

_____
(Signature of Certifying Officer/Manager)

(Corporate Seal Here, if applicable)

Exhibit A

Existing Telecommunication Leases

A-1: AT&T Lease

A-2: Cricket Lease

A-3: Lease Assumption Form

A-1: AT&T Lease

U.S. Government Lease for Real Property: Communications Space

Lease NO. GS-06-11-2010

THIS LEASE, executed this 21st day of August, 2000,

by and between the UNITED STATES OF AMERICA, acting by and through the ADMINISTRATOR OF GENERAL SERVICES, under section 210 (a) (16) of the Federal Property and Administrative Services Act of 1949, as amended, 40 U.S.C. 490 (a) (16), and the regulations and orders promulgated thereunder, hereinafter referred to as "GSA" or "Lessor",

and

AT&T Wireless PCS, ~~Inc.~~ LLC. by and through its manager, AT&T Wireless Services, Inc. d/b/a AT&T Wireless Services, a Delaware Limited Liability Company
11710 Beltsville Drive, Beltsville, MD 20705

WITNESSETH :

that GSA hereby leases to LESSEE and LESSEE hereby leases from GSA, subject to all terms and conditions stated herein, the property described below for the term `specified below.

1. DESCRIPTION OF PROPERTY: Rooftop and support space at
West Heating Plant,
1051 29th Street, N.W., Washington, D.C. 20007

The demised property is more particularly described in Rider No. 1, entitled "Property Description."

2. USE OF PROPERTY: The leased premises is to be used solely for the installation, operation, maintenance and removal of radio antennas and communications equipment in conjunction with LESSEE's primary business; LESSEE shall bear the sole responsibility for furnishing and paying for all labor, materials, equipment and supplies used in conjunction with the exercise by the LESSEE of any right granted hereunder, unless specifically absolved from said responsibilities elsewhere within this lease.

3. TERM AND RENTAL: The term of this Lease shall be five (5) years, commencing September 1, 2000 and expiring August 31, 2005. The LESSEE shall pay to GSA, as rent for the demised premises, the annual sum of see Rider No.3 payable in monthly installments of See Rider No.3 in advance and due on or before the first day of the month throughout the lease term. Payments shall be made in the form of a check payable to "General Services Administration" which must also be notated with the Lease Number, and mailed to General Services Administration, P.O. Box 70697, Chicago, IL 60673.

Gov't

Lessee

4. RENEWAL: This Lease may be renewed for three five year options, provided the following criteria are met: LESSEE must notify contracting officer of his intent to renew no later than one (1) year prior to expiration of the initial lease term with a written statement of intent; and the rental rate must be in accordance with Rider No.3 of this lease. Failure to comply with either condition will void any renewal options. Exercise of the renewal option will affect only the rental rate and term; no other term or condition can be altered in the process of renewal.

5. SERVICES AND UTILITIES: LESSEE will contract for in his own name and pay for all services and utilities associated with tenancy; all meterable utilities shall be obtained and paid for by LESSEE, who will bear the responsibility and cost of meter installation and removal. GSA provides no services nor utilities under terms of this Lease. Submetering, at the option of the Government, is an acceptable alternative if utility payments are made directly to the designated Field Office or service provider.

6. PROPERTY CONDITION: LESSEE understands that the demised premises are offered and leased on an "as is, where is" basis, without representation or warranty on the part of the Lessor for suitability for any purpose. LESSEE has inspected the property, knows the extent and condition of said property, and acknowledges receipt of the premises as is, where is, from GSA. GSA is under no obligation to make any repair, alteration or addition to the property nor obligation to perform any act of maintenance or upkeep thereto.

LESSEE shall not be responsible for any environmental deficiencies or environmental conditions of the property unless said deficiencies or conditions are caused by LESSEE, LESSEE's agents, or LESSEE's contractors.

In the event of any damage, including damage by contamination, by hazards brought onto the Leased Premises by LESSEE or its officers, agents, servants, employees or invitees, LESSEE, at the election of GSA, shall promptly repair, replace or make monetary compensation for the repair or replacement of such property to the reasonable satisfaction of GSA. LESSEE shall comply with all local, state, and federal environmental laws and regulations.

7. GSA CONSENT FOR ALTERATIONS: LESSEE shall make no alteration, improvement, nor addition to the leased premises, nor shall cause to be placed any card, sign, billboard, without obtaining the prior written consent of GSA, said consent not to be unreasonably withheld or delayed.

8. EARNEST MONEY DEPOSIT: Lessor acknowledges receipt of two-twelfths (2/12) of the annual amount shown in Paragraph 3 of this lease. Lessor and LESSEE acknowledge that one-half of this earnest money deposit will be applied to the first month's rent, and the remaining one-half will be used as a security deposit to cover any monies outstanding and due GSA as a result of damage to the leased premises or other damage resulting from LESSEE's use of site or from non-performance of a contractual obligation or duty under the terms of this Lease. The security deposit will be held in an non-interest bearing escrow account and will be returned after Lease expiration when determination has been made by Lessor that no more monies are due hereunder.

Gov't

TCB

Lessee

9. TERMINATION:

(a) GSA may terminate the Lease as follows:

(i) NON COMPLIANCE: The Lease may be terminated by GSA if Lessee fails to comply with any of the terms and conditions specified herein by the issuance of 30-days' written notice provided that Lessee has not made sufficient attempts to cure.

(ii) INSOLVENCY OR BANKRUPTCY: GSA may terminate the Lease and re-enter and take possession of the property upon issuance of 5 days' written notice to the Lessee if it is determined that Lessee is insolvent, bankrupt, or placed in receivership, or if Lessee's assets are assigned to a trustee for the benefit of creditors. In any of these cases, Lessee shall have sixty (60) days to cure before termination notice is issued.

(iii) FEDERAL REQUIREMENT: In the event the property is required for Federal use, if GSA identifies a Federal use for it, or if Lessee's use of the property is not consistent with Federal program purposes, GSA may terminate the Lease upon issuance of ninety (90) days written notice to Lessee.

(iv) SALE OR TRANSFER OF THE PROPERTY : If the property is to be sold or transferred by GSA during the term of this Lease, GSA may terminate this Lease by providing 90 days written notice in advance of the actual sale or transfer date.

(b) LESSEE TERMINATION: Lessee may terminate the Lease if it reasonably determines the leased premises are no longer suitable for the purpose intended under this lease by virtue of the site's unsuitability as a communications facility for Lessee's purposes by providing 60 days written notice.

(c) REPLACEMENT SPACE: In the event the property is required for Federal use or if GSA identifies a Federal use for it, or if the property is to be sold or transferred, Lessee shall have the first right of any private party (i.e., any party not an agency of the federal government) to lease space at an alternate available location at GSA's discretion.

10. MAINTENANCE OF PREMISES: LESSEE shall exercise responsible care in the occupancy and use of the property and shall keep and maintain same in good order, normal wear and tear excepted. LESSEE's responsibilities shall include, but not be limited to, removal of trash, litter, broken glass and other hazards/obstructions from the leased premises. LESSEE shall ensure the property is maintained free of any other noxious or nuisance-causing condition. Upon expiration or termination of this Lease, LESSEE shall vacate the property, remove all of his effects, and forthwith leave GSA in peaceful possession, free and clear of any liens, claims, or encumbrances, and in as good condition as existed at the time of commencement of this Lease, normal wear and tear excepted.

TCS

Lessee

11. ENTRY BY GSA: GSA or its designated representative (s) shall have the right to enter onto the leased property with twenty four (24) hours notice to conduct inspections, except in emergencies. GSA or its representative (s) will assume full responsibility, as provided by law, for damage to property or injuries to persons arising directly as a result of such inspection, or entry. When GSA determines that said entry has reduced the area under LESSEE's control, GSA may authorize a proportionate reduction in rental payment for the time during which LESSEE is deprived of use.

12. DESTRUCTION BY UNAVOIDABLE CASUALTY: If the property shall be destroyed or be so totally damaged by fire or other unavoidable casualty so as to render the premises untenantable, wholly or in part, then payment of rent shall cease and either party may terminate this Lease by written notice to that effect. If part of the property be rendered untenantable, rental payment may apportioned to reflect the part remaining usable to LESSEE.

13. PERMITS, TAXES AND PUBLIC UTILITIES: LESSEE shall comply with all applicable Federal state and municipal ordinances and GSA regulations in the exercise of any right herein conveyed, and shall obtain and pay for all licenses, permits, and taxes in its own name. All public utilities must be contracted for in LESSEE's name, and any meters must be installed subject to the approval of the Lessor at no cost whatsoever to Lessor said approval not to be unreasonably withheld or delayed. All other costs of doing business shall be borne exclusively be LESSEE.

14. SUB-CONTRACTORS AND AGENT FOR LESSEE: All work must be performed by skilled tradesmen who are accomplished at their craft and bonded against loss due to damages resulting directly or indirectly from work performed.

15. LIABILITY AND INDEMNIFICATION: GSA, its agents and representatives shall be indemnified and held harmless from any claim for loss of or damage to life, limb or property arising directly or indirectly out of any action or the exercise of any right under this Lease.

16. INSURANCE: LESSEE shall obtain and carry, at no expense to GSA and to GSA's satisfaction, general liability insurance with limits of liability of not less than $One Million Dollars ($1,000,000.00).The insurance must include the United States of America, acting by and through the Administrator of General Services as an additional insured as respects operations under this Lease. The Certificate of Insurance shall include the following endorsement: "It is a condition of this policy that the insurance company shall furnish a written notice to the General Services Administration, Service Delivery Support (WPY), Outleasing, 7th & D Streets, SW. Washington, DC 20407, in writing, thirty (30) days in advance of the effective date of any reduction or cancellation of this policy.

TCB

Lessee

17. ASSIGNMENT OF LEASE: Except with the prior written consent of GSA, which consent shall not be unreasonably withheld, LESSEE shall neither transfer nor assign this Lease or any rights hereunder, nor sublet the property or any portion thereof, nor grant any privilege of license whatsoever in connection with this Lease unless said assignment is to a principal or affiliate of LESSEE. Any such action taken without the express written approval, assignment, and assumption of Lease by GSA will constitute a violation of this Lease by LESSEE and a trespass by any unauthorized subtenant of assignee.

18. UNIFORM RELOCATION ASSISTANCE ACT: LESSEE acknowledges that it acquires no right by virtue of execution of this lease to claim any benefits under the Uniform Relocation and Assistance Act of 1970, 84 Stat. 1894 (42 U. S. C. 4601).

19. MISCELLANEOUS

(a) EXAMINATION OF RECORDS: The Comptroller General of the United States, the Administrator of General Services, the General Services Administration's Office of the Inspector General, or any of their duly authorized representatives shall, until expiration of three (3) years after final payment under this Lease, have access to and the right to examine any directly pertinent books, documents, papers, and/or records of the LESSEE involving transactions related to this lease and the awarding thereof.

(b) DISPUTES: Any dispute arising under or relating to this lease shall be resolved exclusively by the Contracting Officer, whose decision shall be final. The LESSEE waives any and all rights to have any such dispute considered or resolved by anyone other than the Contracting Officer.

(c) NOTICES: Any notice required to be given under this Lease shall be made by registered or certified mail, return receipt requested, or by recognized overnight courier or by receipted hand delivery to the addresses set forth below:

For Lessee: AT&T Wireless PCS, ~~Inc.~~ LLC.
Timothy C. Brenner
Manager-System Development
11710 Beltsville Drive
Beltsville, MD 20705

With a copy to: AT&T Legal
15 East Midland Avenue
Paramus, NJ 07652

For Lessor: U.S. General Services Administration
7th and D Streets, S.W., Room 7409 (WPY)
Washington, D.C. 20407
Attn: Real Estate Outleasing

Either party may from time to time designate any other address for notice purposes by written notice to the other party.

Lessee

20. RIDERS AND ATTACHMENTS: The parties acknowledge the following attachments and riders made to this Lease and made a part hereof prior to signing:

RIDER NO 1 : Property Description

RIDER NO 2 : Special Terms Regarding Antenna Use and Installation

RIDER NO 3 : Rent

ATTACHMENT I : Disputes and Delinquent Outlease Rental Payments

ATTACHMENT II : Plan Showing Leased Premises

IN WITNESS WHEREOF

the parties hereto have caused this Lease to be executed as of the day and date first above written.

FOR THE UNITED STATES OF AMERICA,
GENERAL SERVICES ADMINISTRATION

BY: _____

NAME: (signed) W.C. Fuller
Contracting Officer

FOR THE LESSEE

BY: _____

NAME: TIMOTHY C. BRENNER

TITLE: MANAGER - SYSTEM DEVELOPMENT

EXECUTED IN THE PRESENCE OF:

Mark W Burrell - ATTWS
Signature

11710 Beltsville Drive
Address

Beltsville, MD, 20705

Rider NO. 1

"Property Description"

Approximately 633 square feet located on the 6th floor, on the second level of a room formerly known as the "storage area", for placement of support equipment, together with up to nine (9) panel-style antennas to be mounted to the penthouse superstructure and cooling tower screening wall where indicated on Attachment Two, "Plan Showing Leased Premises".

Lessee

RIDER NO. 2

"Special Terms Regarding Antenna Use & Installation"

RADIO FREQUENCY INTERFERENCE:

LESSEE shall ensure that the use of the lease premises does not measurably interfere with existing operations on or immediately around the site, and that situations creating the existence of Radio Frequency Interference (RFI) will be cured within 10 calendar days. If tenant cannot occupy the space without creating an incurable RFI situation, then this Lease shall be automatically terminated by mutual consent. Within ten calendar days of receiving notice of an RFI problem, LESSEE shall notify GSA in writing if there are extenuating circumstances that prevent curing the problem within ten days. Based on the circumstances, LESSEE may then be granted an extension of time to cure the problem.

ACCESS FOR LESSEE:

Access to the building must be coordinated with the Federal Government. LESSEE shall provide GSA with lists of personnel who will require access to the building. LESSEE shall update these lists and otherwise coordinate such access as required by GSA. At GSA's discretion, this function may be transferred to the Federal tenant agency of the building. If LESSEE requests access outside normal operating hours and GSA staff are not ordinarily on-site, GSA shall respond within a reasonable time based on available personnel and LESSEE agrees to reimburse GSA at an overtime rate not to exceed $30 per hour for each occurrence.

INSTALLATION OF COMMUNICATION SITE:

Installation of any antennas, cabling, and related equipment shall be done in accordance with existing Federal, state and municipal codes, including the National Electrical Code and any other codes which directly relate to the issues of radio equipment and/or antennas; in any case where codes differ, the more stringent application shall prevail. All work shall be done by personnel who are bonded and licensed tradesman. LESSEE is required to coordinate installation of all electrical connections which tie into building systems with the resident building engineer, and any others who have equipment and connections on the site which would be affected. Nothing in this paragraph shall be construed as diminishing the right of GSA to review and approve all such work, nor does it absolve LESSEE from his obligation to obtain such review and approval. The requirements of this paragraph are above and beyond the requirements for GSA review and approval. LESSEE shall make no penetrations or alternations to the roof of the leased premises without the prior consent of the Government. The Government will review all technical drawings for the installation of the communication site and all aspects of the installation will be subject to Government approval. LESSEE agrees to work with the Government's roofing contractor, where applicable, and to coordinate all roof work with that contractor and other contractors as

 Gov't TCB Lessee

applicable. All work must be in accordance with any existing warranties and to the satisfaction of the Government's Contractors.

In the event the roof of the leased area is damaged as a result of work performed directly or indirectly in connection with LESSEE's improvements thereon during the construction, operation, maintenance or removal of such improvements, due to acts or omissions of LESSEE, or LESSEE's agent, contractor or employees, LESSEE shall be solely responsible for all costs and expenses to repair such damage and to return the roof to the condition it was in prior to the occurrence of such damage.

All equipment installed on the premises that is visible from the exterior of the building must be painted or camouflaged to completely blend with the background of equipment, structures of fixtures already in place and to the satisfaction of the Government. Whip antennas mounted on the exterior of the building may not exceed twelve feet in height. Panel-type antennas mounted on the exterior of the building may not exceed eight feet in width or twelve feet in length.

If electrical service is provided to LESSEE's equipment under this Lease, LESSEE shall install a submeter, the location of which will be coordinated with the local Facilities Manager. The Government reserves the right to verify electrical usage periodically and to bill LESSEE for such use in excess of the original estimated amount if included in the annual rent. LESSEE agrees to pay such charges to or on behalf of Lessor, as the Government may specify, within 30 days of receipt of invoice.

RADIO FREQUENCY COMPLIANCE AND CERTIFICATION

LESSEE, at its sole cost and expense, shall take all necessary actions to comply with all applicable Federal Communications Commission (FCC) radio frequency (RF) exposure regulations and requirements and shall take reasonable precautions so that neither workers nor the public are subject to RF exposures above the FCC-specified levels.

LESSEE shall coordinate the compliance and certification of its installation with the FCC rules and guidelines for human exposure to RF electromagnetic fields with other telecommunications lessees on site, if any, and shall obtain written certification by a firm with documentable expertise, acceptable to LESSOR, that LESSEE's facility complies with the RF exposure regulations and requirements. LESSEE shall furnish a written copy of the entire report and certification to LESSOR within two (2) business days after receipt. LESSEE shall coordinate and contract for this report and certification so that it is completed within ten (10) business days after LESSEE's equipment installation is sufficiently complete to allow transmission to commence. In addition, after the initial installation, LESSEE shall be responsible for updating this

Gov't

TGS
Lessee

certification any time LESSEE changes its technical parameters (i.e., effective radiated power (ERP), antenna changes, etc.), within ten (10) business days after any such change. Any such updated certification shall take into account the cumulative effects of all existing communications facilities at said rooftop.

If LESSEE does not provide the required reports and certifications within the time frames specified above, then LESSOR may terminate the Lease in accordance with Paragraph 9.

If a new carrier collocates on this site, or if any existing carrier on site makes modifications to its technical parameters (i.e., ERP, antenna changes, etc.), then LESSEE shall cooperate with all parties so that updated certifications can be obtained. LESSEE shall not be responsible for the compliance of any other carrier, or for paying the costs of any other carrier's certification report, but shall work cooperatively with said carrier(s) to ensure compliance at said rooftop.

Compliance and certification under this provision shall consist of the signed RF engineering report, together with implementation of all recommendations to assure LESSEE's site-wide compliance, including, as appropriate, warning signage and other RF exposure mitigation measures.

LESSOR reserves the right to require LESSEE to make changes in its installation as needed to comply with any changes in Federal guidelines or regulations.

Gov't

TCB
Lessee

Rider NO. 3 Rent

Year	Annual Rent	Monthly Rent
1	$28,500.00	$2,375.00
2	$29,640.00	$2,470.00
3	$30,825.60	$2,568.80
4	$32,058.62	$2,671.55
5	$33,340.97	$2,778.41
6	$34,674.61	$2,889.55
7	$36,061.59	$3,005.13
8	$37,504.06	$3,125.34
9	$39,004.22	$3,250.35
10	$40,564.39	$3,380.37
11	$42,186.96	$3,515.58
12	$43,874.44	$3,656.20
13	$45,629.42	$3,802.45
14	$47,454.59	$3,954.55
15	$49,352.78	$4,112.73
16	$51,326.89	$4,277.24
17	$53,379.97	$4,448.33
18	$55,515.16	$4,626.26
19	$57,735.77	$4,811.31
20	$60,045.20	$5,003.77

It is acknowledged that rent shall commence on December 1, 2000, but that the lease years begin each September 1st, so the rent will escalate on September 1st of each year. The first annual rent escalation shall occur on September 1, 2001.

Gov't

TCB

Lessee

ATTACHMENT I (page 1 of 2)

DELINQUENT OUTLEASE RENTAL PAYMENTS

(1) The United States Department of Justice and the General Accounting Office have jointly issued amended Federal Claims Collection Standards (4 CFR Parts 101-105) which reflect changes to the Federal Claims Collection Act of 1966 (31 U.S.C. 3701-3719) made by the passage of the Debt Collection Act of 1982 (P.L. 97-365, 96 Stat. 1754).

(2) Under the provisions of the Debt Collection Act of 1982, the following remedies in the collection of delinquent rental payments may be taken by the Government:

(a) Interest shall be assessed on delinquent lease payments at the rate of the current value of funds to the Treasury as prescribed by the Secretary of the Treasury on the date interest begins to run or another rate of interest shall be assessed if another rate is necessary to protect the interests of the United States;

(b) Penalty charges not to exceed six percent per year shall be assessed on any portion of a delinquent lease payment over 90 days past due;

(c) Administrative charges may be assessed to cover the costs of processing and handling delinquent lease payments;

(d) Delinquent outlease debtor information may be disclosed to credit bureaus;

(e) Delinquent outlease debtor files may be referred to debt collection agencies;

(f) Delinquent lease payments may be collected by administrative offset whenever possible.

(3) The Government's remedies to collect delinquent lease payments shall be administered by:

GENERAL SERVICES ADMINISTRATION
Finance Division (7BCRP)
819 Taylor Street
Fort Worth, TX 76102
Telephone: (817) 334-2748

(4) This lease is subject but not limited to the following laws and Regulations: 4 CFR Part 102.3(b)(2)(i), the Debt Collection Act of 1982 Section II, Public Law PL 97-365, and GSA Finance Accounts Receivable Handbook PFM P 4253.1.

Gov't

TCB
Lessee

DISPUTES

37. 52.233-1- DISPUTES (DEC 1991)

a. This contract is subject to the Contract Disputes Act of 1978, as amend (41 USC 601-613).

b. Except as provided in the Act, all disputes arising under or relating to this contract shall be resolved under this clause.

c. "Claim," as used in this clause, means a written demand or written assertion by one of the contracting parties seeking, as a matter of right, the payment of money in a sum certain, the adjustment or interpretation for contract terms, or other relief arising under of relating to this contract. A claim arising under a contract, unlike a claim relating to that contract, is a claim that can be resolved under a contract clause that provides for relief sought by the claimant. However, a written demand or written assertion by the Contractor seeking the payment to money exceeding $50,000 is not a claim under the Act until certified as required by subparagraph d. 2. below. A voucher, invoice, or other routine request for payment that is not in dispute when submitted in not a claim under the Act. The submission may be converted to a claim under the Act, by complying with the submission and certification requirements of this clause, if it is disputed either as to liability of amount or is not acted upon in a reasonable time.

d. 1. A claim by the Contractor shall be made in writing and submitted to the Contracting Officer for a written decision. A claim by the Government against the Contractor shall be subject to written decision by the Contracting Officer.

2. For Contracting claims exceeding $50,000, the Contractor shall submit with the claim a certification that-

(a) The claim is made in good faith;

(b) Supporting data are accurate and complete to the best of the Contractor's knowledge and belief; and

(c) The amount requested accurately reflects the contract adjustment for which Contractor believes the Government is liable.

3. (a) If the Contractor is an individual, the certification shall be executed by that individual.

(b) If the Contractor is not an individual, the certification shall be executed by that individual.

(1) A senior company official in charge at the Contractor's plant or location involved; or

(2) An officer or general partner of the Contractor having overall responsibility for the conduct of the Contractor's affairs.

(e) For Contractor claims of $50,000 or less, the Contracting Officer must, if requested in writing by the Contractor, render a decision within 60 days of the request. For Contractor certified claims over $50,000, the Contracting Officer must, within 60 days, decide to claim or notify the Contractor of the date by which the decision will be made.

(f) The Contracting Officer's decision shall be final unless the Contractor appeals or files a suit as provided in the Act.

(g) At the time a claim by the Contractor is submitted to the Contracting officer or a claim by the Government is presented to the Contractor, the parties, by mutual consent, may agree to use alternative means of dispute resolution. When using alternate dispute resolution procedures, any claim, regardless of amount, shall be accompanied by the certification described in paragraph (d) (2) of this clause, and executed in accordance with paragraph d. 3. of this clause.

(h) The Government shall pay interest on the amount found due and unpaid from (1) the date the Contracting Officer receives the claim (property certified if required), or (2) the date payment otherwise would be due, if that date is late, until date of payment. Simple interest on claims shall be paid at the rate, fixed by the Secretary Officer receives the claim and then at the rate applicable for each 6-month period as fixed by the Treasury Secretary during the pendency of the claim.

(i) The Contractor shall proceed diligently with performance of this contract, pending final resolution of any request for relief, claim, appeal, or action arising under the contract, and comply with any decision of the Contracting Officer.

Gov't Lessee

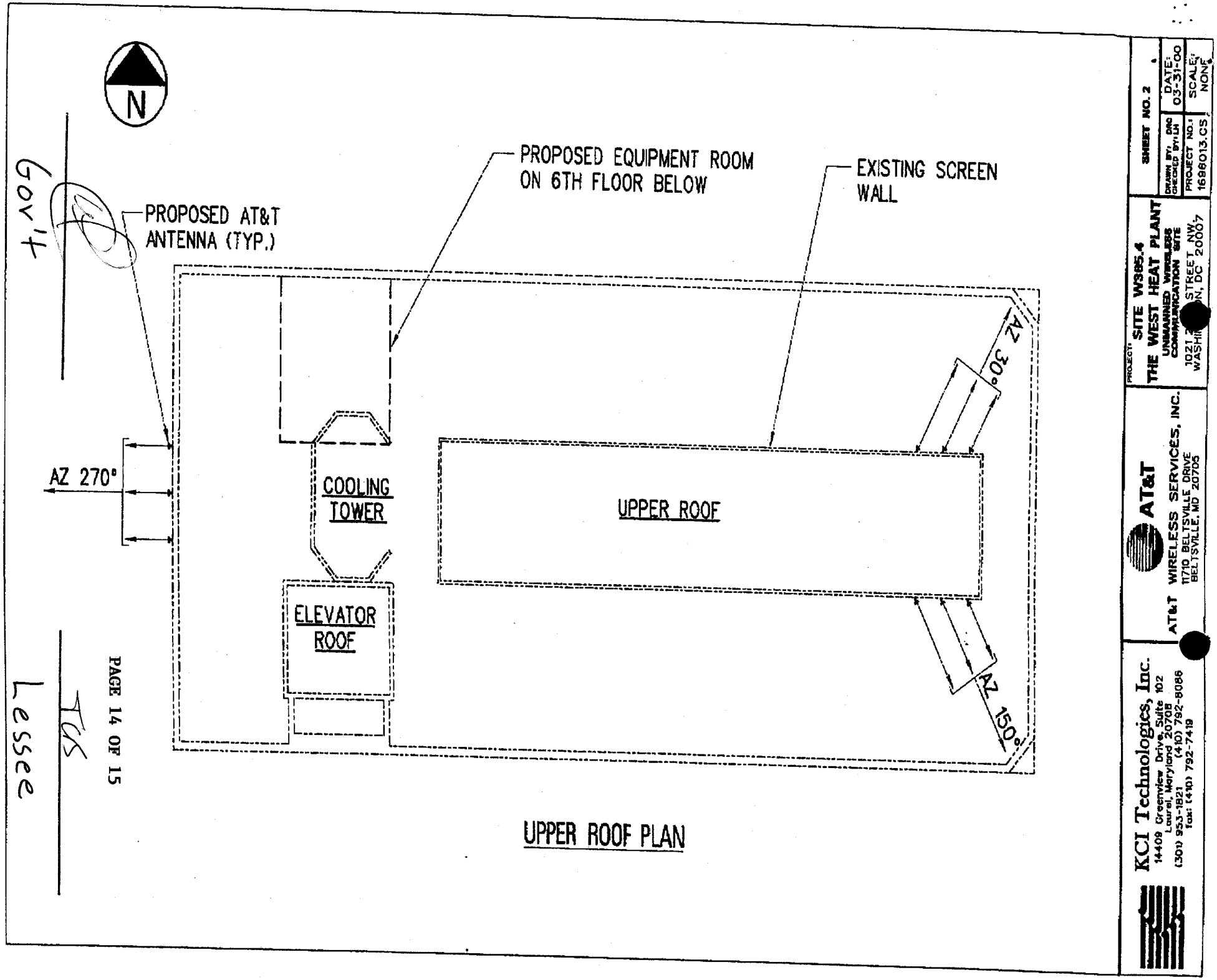
N
PROPOSED AT&T ANTENNA (TYP.)
PROPOSED EQUIPMENT ROOM ON 6TH FLOOR BELOW
EXISTING SCREEN WALL
AZ 270°
COOLING TOWER
ELEVATOR ROOF
UPPER ROOF
AZ 30°
AZ 150°
Gov't
Lessee
TCS
PAGE 14 OF 15
UPPER ROOF PLAN
KCI Technologies, Inc.
14409 Greenview Drive, Suite 102
Laurel, Maryland 20708
(301) 953-1821 (410) 792-8086
fax: (410) 792-7419
AT&T
AT&T WIRELESS SERVICES, INC.
11710 BELTSVILLE DRIVE
BELTSVILLE, MD 20705
PROJECT: SITE W385.4
THE WEST HEAT PLANT
UNMANNED WIRELESS COMMUNICATION SITE
1021 STREET NW,
WASHINGTON, DC 20007
SHEET NO. 2
DRAWN BY: DNG
CHECKED BY: LH
DATE: 03-31-00
PROJECT NO.: 1696013.CS
SCALE: NONE

AT[redacted]CHMENT II: PLAN SHOWING LEASED [redacted]EMISES
(Page TWO of TWO)

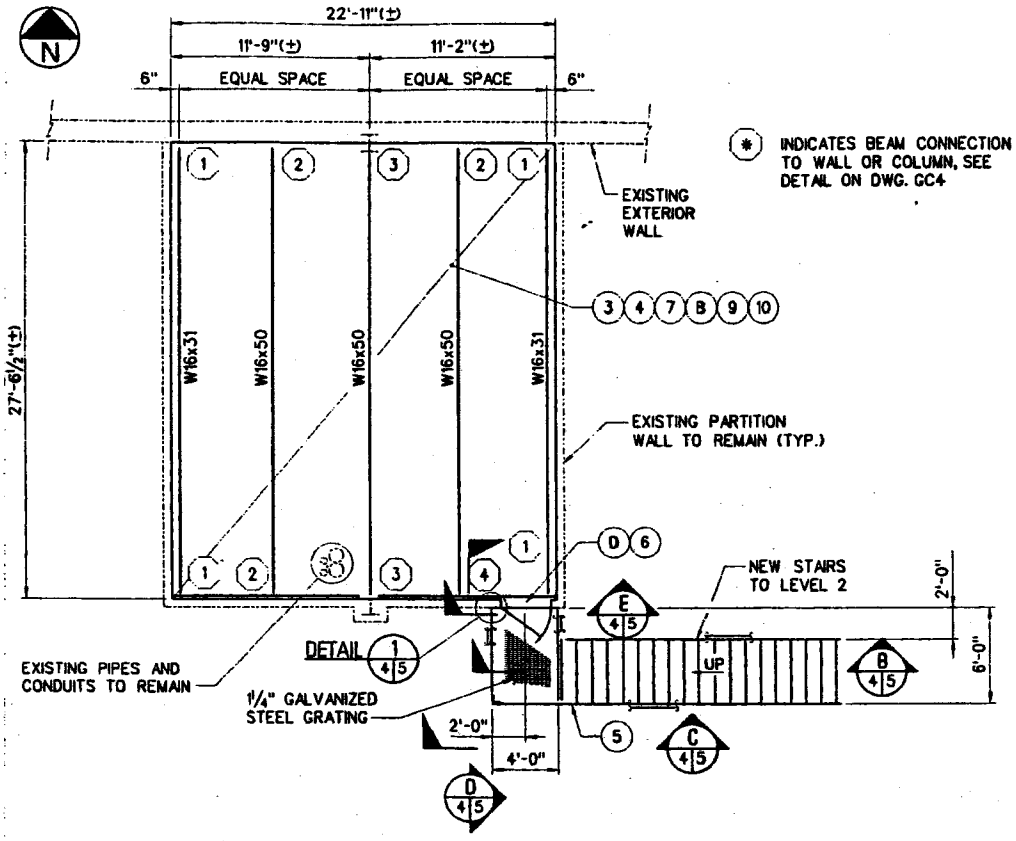

PLAN OF PROPOSED AT&T EQUIPMENT ROOM – LEVEL 2

SCALE: 3/16" = 1'-0"

EXISTING PARTITION WALL TO REMAIN (TYP.)

DOOR DETAIL

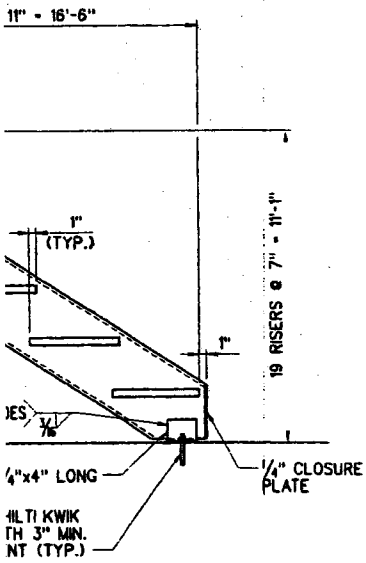

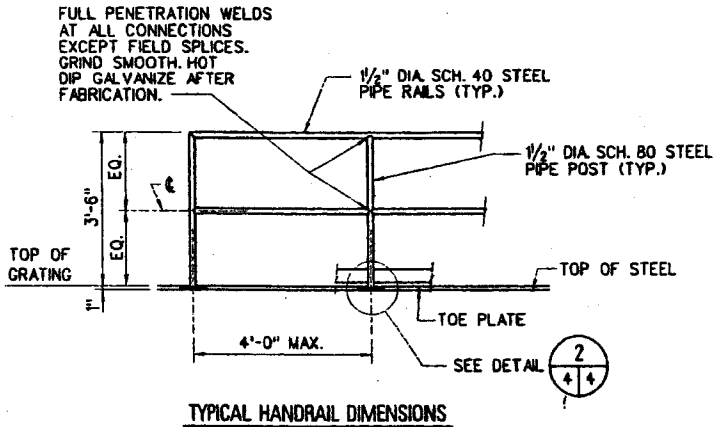

TYPICAL HANDRAIL DIMENSIONS

SCALE: ½" = 1'-0"

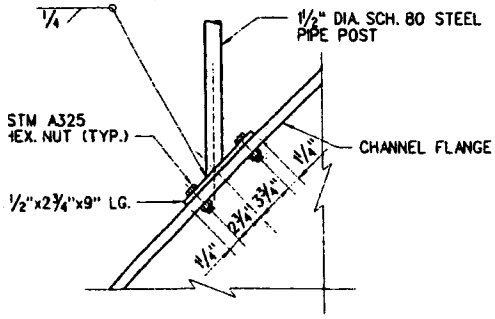

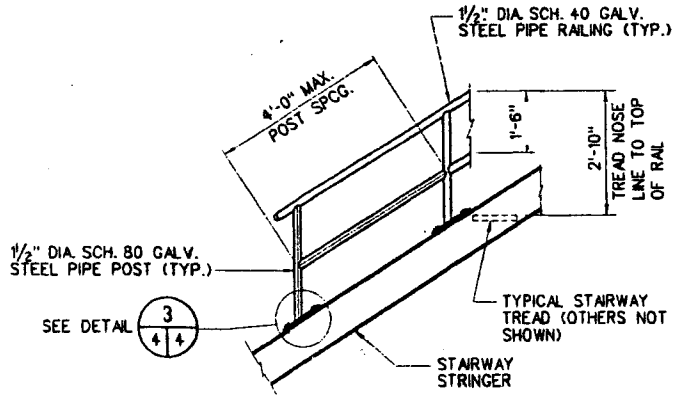

GENERAL NOTES:

1. THE CONTRACTOR SHALL ORDERING MATERIAL AND
2. THE CONTRACTOR SHALL CEILING, ETC. WHERE DAM
3. THE CONTRACTOR SHALL DRAWINGS FOR ALL APPL DRAWINGS.

DEMOLITION NOTES:

(A) REMOVE ALL FREE STAND AND ACCESS STAIRWAY.
(B) REMOVE EXISTING DOUBLE
(C) REMOVE EXISTING WINDOW
(D) SAW-CUT AND REMOVE M

NEW CONSTRUCTION NOTES

(1) FILL IN ONE SIDE OF MAS THICKNESS TO MATCH EX
(2) FILL IN WINDOW OPENING
(3) PROVIDE NEW STEEL BEA FOR LEVEL 2 AS SHOWN.
(4) PROVIDE 5" CONCRETE SL
(5) CONSTRUCT NEW STAIRW
(6) INSTALL HOLLOW METAL
A. PROVIDE CYLINDER L
B. PROVIDE WEATHER S NO. GC5.
(7) PREPARE FLOOR AND MA MANUFACTURER'S RECOMM AND NEW VINYL BASE.
(8) ALL NEW AND EXISTING INSTA-FOAM'S INSTA-FIRE AIRTIGHT.
(9) PATCH AND PAINT WALLS
(10) MAKE ROOF PENETRATION

Lessee

Gov't

GENERAL SERVICES ADMINISTRATION PUBLIC BUILDINGS SERVICE SUPPLEMENTAL LEASE AGREEMENT	SUPPLEMENTAL AGREEMENT No. 1 TO LEASE NO. GS-06-11-2010	DATE 12/8/00

ADDRESS OF PREMISES

GSA West Heating Plant
1051 29th Street, N.W.
Washington, D.C. 20007

THIS AGREEMENT, made and entered into this date by and between AT&T Wireless PCS, LLC, by and through its manager, AT&T Wireless Services, Inc.

whose address is:

AT&T Wireless PCS
11710 Beltsville Drive
Beltsville, MD 20705

hereinafter called the Lessee, and the UNITED STATES OF AMERICA, hereinafter called the Government:

WHEREAS, the parties hereto desire to amend the above Lease;

NOW THEREFORE, these parties for the considerations hereinafter covenant and agree that the said lease is hereby amended as follows:

The support cabinets and associated equipment shall be located on top of the roof, within the masonry wall, where indicated on the attachment to this Supplementary Lease Agreement("SLA"). These revisions do not effect the agreed-upon locations for placement of the antennas, which are also shown on the attachment to this SLA.

The attachment to this SLA replaces "ATTACHMENT II: Plan Showing Leased Premises" in the original Lease Agreement.

All other terms and conditions of the lease shall remain in full force and effect.

IN WITNESS WHEREOF, the parties subscribed their names as of the above date.

LESSEE

BY Timothy C. B[illegible]
(Signature)

MANAGER - SYSTEM DEV.
(Title)

IN THE PRESENCE OF

[illegible]
(Signature)

c/o TEA group 4140 Cornelia Pl. 20705
(Address)

UNITED STATES OF AMERICA

BY [illegible]
(Signature)

Contracting Officer, GSA,NCR,PBS
(Official Title)

GSA FORM 276

Attachment to GS-06-11-2010, Supplementary Lease Agreement 1

REVISED ATTACHMENT II: PLAN SHOWING LEASED PREMISES

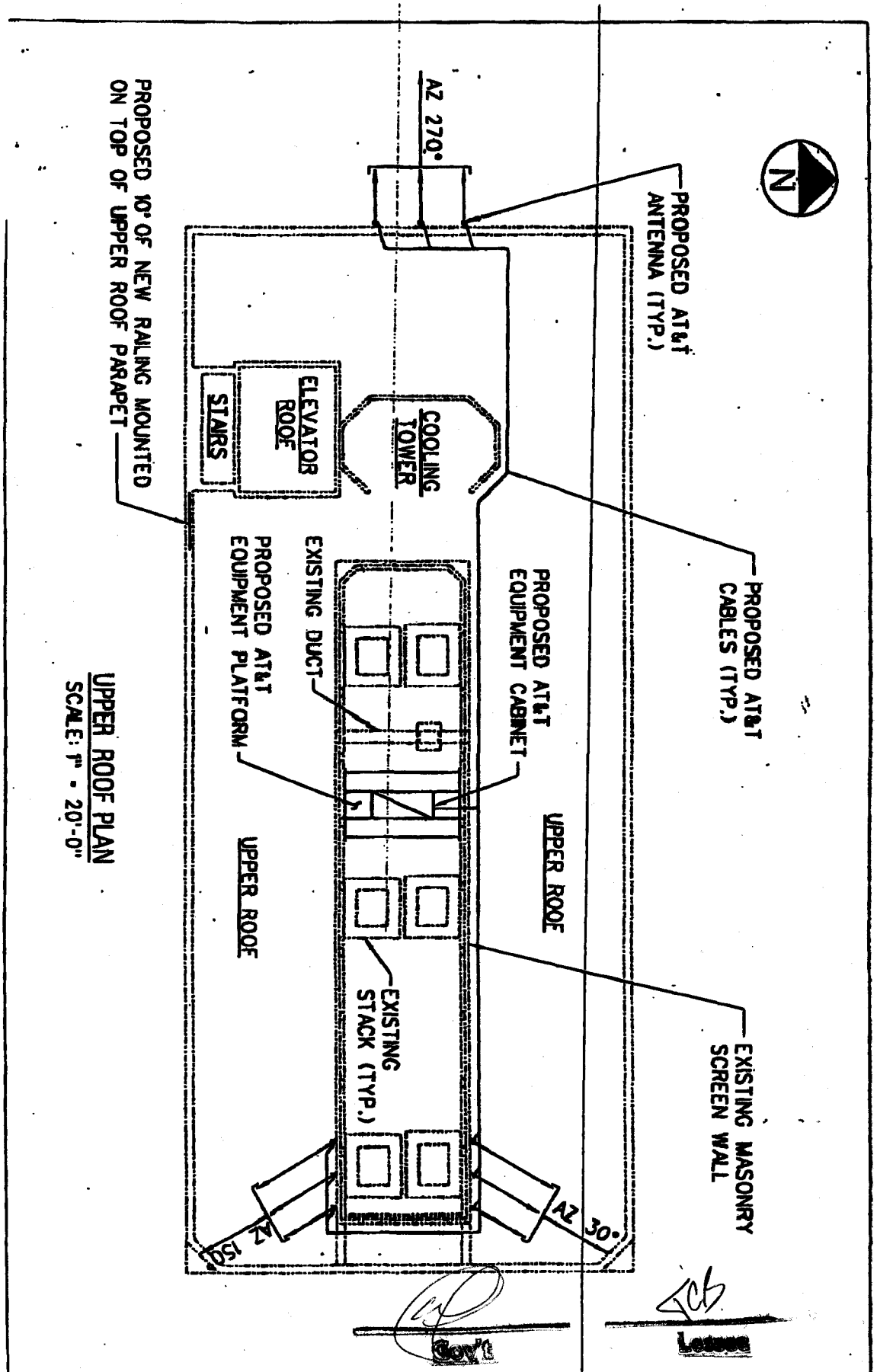

KCI Technologies, Inc.
14400 Greenview Drive, Suite 102
Laurel, Maryland 20708
(301) 953-1821 (410) 792-8066
fax (410) 792-7410

AT&T
AT&T WIRELESS SERVICES, INC.
1710 BELTSVILLE DRIVE
BELTSVILLE, MD 20705

PROJECT: SITE W365.4
THE WEST HEAT PLANT
UNMANNED WIRELESS COMMUNICATION SITE
1021 20th STREET NW,
WASHINGTON, DC 20007

LEASE EXHIBIT

DRAWN BY:	DATE: 10-04-06
PROJECT NO.: 1408013 CS	SCALE: AS NOTED

GENERAL SERVICES ADMINISTRATION PUBLIC BUILDINGS SERVICE SUPPLEMENTAL LEASE AGREEMENT	SUPPLEMENTAL AGREEMENT No. 2 TO LEASE NO. GS-06-11-0210	DATE 4-6-07

ADDRESS OF PREMISES GSA West Heating Plant
1051 29th Street, N.W.
Washington, D.C. 20007

THIS AGREEMENT, made and entered into this date by and between: AT&T Wireless PCS, LLC, which later entered into a corporate merger with Cingular Wireless

whose address is: New Cingular Wireless PCS, LLC
7150 Standard Drive
Hanover, MD 21076

hereinafter called the Lessee, and the UNITED STATES OF AMERICA, hereinafter called the Government:

WHEREAS, the parties hereto desire to amend the above Lease.

NOW THEREFORE, these parties for the considerations hereinafter covenant and agree that the said lease is hereby amended as follows:

LESSEE may maintain a total of two GPS antennas as a part of its installation, and these antennas shall be pole-mounted at or near the north side of Lessee's equipment platform. One of the two GPS antennas may be Kathrein Scala model #OG-860/1920/GPS-A, which has two coaxial ports, and receives GPS signals in addition to wireless phone bands. For purposes of this Supplemental Lease Agreement ("SLA"), Kathrein Scala Model #OG-860/1920/GPS-A, a two-antenna combination, will be considered as a single GPS antenna.

Rent shall increase by a total of $400 per month for the inclusion of the two GPS antennas, effective April 1, 2007, and this addition to rent shall escalate at the same time and manner as the remainder of the rent provided for in Rider 3 of the Lease.

All other terms and conditions of the lease shall remain in full force and effect.

IN WITNESS WHEREOF, the parties subscribed their names as of the above date.

LESSEE:

BY _____ (Signature)

CAROLYN MITCHELL
CINGULAR WIRELESS
MGR. OF REAL ESTATE &
CONSTRUCTION
(Title)

IN THE PRESENCE OF

_____ (Signature)

7150 STANDARD DR HANOVER MD 21076
(Address)

UNITED STATES OF AMERICA

BY _____ (Signature)

Contracting Officer, GSA,NCR,PBS
(Official Title)

GSA FORM 276

GENERAL SERVICES ADMINISTRATION PUBLIC BUILDINGS SERVICE SUPPLEMENTAL LEASE AGREEMENT	SUPPLEMENTAL AGREEMENT No. 3 TO LEASE NO. GS-06-11-2010	DATE JUN 11 2009

ADDRESS OF PREMISES West Heating Plant
1051 29th St NW
Washington, DC 20007

THIS AGREEMENT, made and entered into this date by and between: New Cingular Wireless PCS, LLC d/b/a AT&T or Cingular

whose address is: AT&T
7150 Srandard Drive
Hanover, MD 21076

hereinafter called the Lessee, and the UNITED STATES OF AMERICA, hereinafter called the Government:

WHEREAS, the parties hereto desire to amend the above Lease.

NOW THEREFORE, these parties for the considerations hereinafter covenant and agree that the said lease is hereby amended as follows:

Notwithstanding anything else contained in the Lease and in order to address LESSEE's responsibility to provide reimbursement for its electrical utility usage when LESSEE has not contracted in its own name for electrical service, Lessee shall arrange with a third party company with documentable expertise, acceptable to LESSOR, to have metering equipment installed so the third party company can determine LESSEE's electrical usage remotely and generate appropriate periodic invoices. LESSEE shall pay all costs associated with installation, maintenance, monitoring and administration, and LESSEE shall promptly pay these invoices as directed. Lessee shall contract to have these services commence within sixty (60) days of the date this Supplemental Lease Agreement ("SLA") is signed by both parties. LESSEE shall also provide for a submeter in all cases where LESSEE does not contract for and pay the electrical utility provider directly.

All other terms and conditions of the lease shall remain in full force and effect.

IN WITNESS WHEREOF, the parties subscribed their names as of the above date.

LESSEE:

BY _____ (Signature)

Carolyn Mitchell
Manager Real Estate & Construction
AT&T Mobility
(Title)

IN THE PRESENCE OF

_____ (Signature)

7150 Standard Dr. Hanover MD (Address)

UNITED STATES OF AMERICA

BY _____ (Signature)

Contracting Officer, GSA,NCR,PBS (Official Title)

GSA FORM 276

GENERAL SERVICES ADMINISTRATION PUBLIC BUILDINGS SERVICE SUPPLEMENTAL LEASE AGREEMENT	SUPPLEMENTAL AGREEMENT No. 4	DATE 05/24/2010
	TO LEASE NO. GS-06-11-2010	

ADDRESS OF PREMISES: West Heating Plant, 1051 29th St NW, Washington, D.C. 20007

THIS AGREEMENT, made and entered into this date by and between New Cingular Wireless PCS, LLC, d/b/a AT&T or Cingular

whose address is: 7150 Standard Drive, Hanover, MD 21076

hereinafter called the Lessee, and the UNITED STATES OF AMERICA, hereinafter called the Government:

WHEREAS, the parties hereto desire to amend the above Lease;

NOW THEREFORE, these parties for the considerations hereinafter covenant and agree that the said lease is hereby amended as follows:

LESSEE may remove its nine (9) existing antenna radome panels (Kathrein model #744-264) and replace them with nine (9) new antenna radome panels (Andrew model #DCXCP-4545A-VTM), to achieve a re-shaping of its RF signal. No additional associated equipment is being provided for in this Supplemental Lease Agreement ("SLA").

LESSEE shall furnish an updated comprehensive RF safety report to LESSOR within twenty-one (21) days of installation.

The rent increase schedule below is to clarify per SLA 2 a rent increase of $400 per month, which escalates at the same time and manner as the remainder of the rent provided for in Rider 3 of the Lease. This increase was to provide for the inclusion of the two GPS antennas, effective April 1, 2007.

Lease Year	Annual Rent	Monthly Rent
4/1/07 – 8/31/07	*$40,861.56	$3,405.13
9/1/07 – 8/31/08	$42,496.02	$3,541.34
9/1/08 – 8/31/09	$44,195.86	$3,682.99
9/1/09 – 8/31/10	$45,963.70	$3,830.31
9/1/10 – 8/31/11	$47,802.25	$3,983.52
9/1/11 – 8/31/12	$49,714.34	$4,142.86
9/1/12 – 8/31/13	$51,702.91	$4,308.58
9/1/13 – 8/31/14	$53,771.03	$4,480.92
9/1/14 – 8/31/15	$55,921.87	$4,660.16
9/1/15 – 8/31/16	$58,158.74	$4,846.56
9/1/16 – 8/31/17	$60,485.09	$5,040.42
9/1/17 – 8/31/18	$62,904.49	$5,242.04
9/1/18 – 8/31/19	$65,420.67	$5,451.72
9/1/19 – 8/31/20	$68,037.50	$5,669.79

* Not an entire lease year, so the "annual rent" figure is an annualized amount. Rent during that 5 month period is $3,405.13 per month as indicated.

All other terms and conditions of the lease shall remain in full force and effect.

IN WITNESS WHEREOF, the parties subscribed their names as of the above date.

LESSEE

BY _____ (Signature)

Carolyn Mitchell
Manager Real Estate & Construction
AT&T Mobility
(Title)

IN THE PRESENCE OF

_____ (Signature)

_____ (Address)

UNITED STATES OF AMERICA

BY _____ (Signature)

Contracting Officer, GSA,NCR,PBS
(Official Title)

GSA FORM 276

GENERAL SERVICES ADMINISTRATION PUBLIC BUILDINGS SERVICE SUPPLEMENTAL LEASE AGREEMENT	SUPPLEMENTAL AGREEMENT No. 5 TO LEASE NO. GS-06-11-2010	DATE 8/15/2011

ADDRESS OF PREMISES West Heating Plant
1051 29th Street, NW
Washington, DC 20007

THIS AGREEMENT, made and entered into this date by and between New Cingular Wireless PCS, LLC d/b/a AT&T or Cingular

whose address is: AT&T
7150 Standard Drive
Hanover, MD 21076

hereinafter called the Lessee, and the UNITED STATES OF AMERICA, hereinafter called the Government or the Lessor:

WHEREAS, the parties hereto desire to amend the above Lease;

NOW THEREFORE, these parties for the considerations hereinafter covenant and agree that the said lease is hereby amended as follows:

LESSEE may remove up to three (3) existing antenna radome panels and replace each, one for one, with Kathrein Model ~~800-19764~~ 800-10764 antenna radome panels. In addition, LESSEE may install up to three (3) 700 Mhz Alcatel-Lucent Model 9442 remote radio heads, up to three (3) AWS Alcatel-Lucent Model 9442 AWS remote radio heads, up to three (3) Raycap Model ~~DC6-48-60-18-8F~~ DC2-48-60-0-9E DC surge suppressors, and up to one (1) additional GPS antenna. LESSEE may also add the following equipment cabinets onto the equipment platform: one (1) Argus Model TE43 cabinet which supports LTE, and one (1) Alcatel Lucent Model 9412 LTE cabinet.

Rent shall increase by $5,000 per year for the additional on-site equipment, which amount shall escalate at the same time and manner as the existing rent. Accordingly, for all rental periods starting June 1, 2011, the rent schedule on Page 2 of this Supplemental Lease Agreement ("SLA") replaces the rent schedule in SLA 4 of this Lease #GS-06-11-2010.

THIS AREA INTENTIONALLY LEFT BLANK

Gov't Lessee

GS-06-11-2010
SLA #5

Lease Period	Annual	Monthly
06/01/11 - 08/31/11*	$52,802.16	$4,400.18
09/01/11 - 08/31/12	$54,914.25	$4,576.19
09/01/12 - 08/31/13	$57,110.82	$4,759.23
09/01/13 - 08/31/14	$59,395.25	$4,949.60
09/01/14 - 08/31/15	$61,771.06	$5,147.59
09/01/15 - 08/31/16	$64,241.90	$5,353.49
09/01/16 - 08/31/17	$66,811.58	$5,567.63
09/01/17 - 08/31/18	$69,484.04	$5,790.34
09/01/18- 08/31/19	$72,263.40	$6,021.95
09/01/19 - 08/31/20	$75,153.94	$6,262.83

*Note: The annual rent figure shown for the period from 06/01/11 - 08/31/11 is an annualized amount only. Rent for that three month period is $4,400.18 per month as shown.

All other terms and conditions of the lease shall remain in full force and effect.

IN WITNESS WHEREOF, the parties subscribed their names as of the above date.

LESSEE

BY _____ (Signature) Name:

Carolyn Mitchell
Area Manager Construction and Engineering
AT&T Mobility
(Title)

IN THE PRESENCE OF

Jennifer Van Riper
Manager of Real Estate
AT&T Mobility

(Signature) Name:

(Address)

UNITED STATES OF AMERICA

BY _____ (Signature) Name:

Contracting Officer, GSA,NCR,PBS
(Official Title)

A-2: Cricket Lease

U.S. Government Lease for Real Property: Communications Space

Lease NO. GS-06-11-0908

THIS LEASE, executed this 17TH day of JUNE, 2009 by and between the UNITED STATES OF AMERICA, acting by and through the ADMINISTRATOR OF GENERAL SERVICES, under section 210 (a) (16) of the Federal Property and Administrative Services Act of 1949, as amended, 40 U.S.C. 490 (a) (16), and the regulations and orders promulgated thereunder, hereinafter referred to as "GSA" or "LESSOR",

and

Cricket Communications, Inc.
10307 Pacific Center Court
San Diego, CA 92121

hereinafter, referred to as "LESSEE"

WITNESSETH :
that GSA hereby leases to LESSEE and LESSEE hereby leases from GSA, subject to all terms and conditions stated herein, the property described below for the term specified below.

1. DESCRIPTION OF PROPERTY: Rooftop and support space at

GSA West Heating Plant
1051 29th Street, NW
Washington, D.C.

The demised property is more particularly described in Rider No. 1, entitled "Property Description."

2. USE OF PROPERTY: The leased premises is to be used solely for the installation, operation, maintenance and removal of radio antennas and communications equipment in conjunction with LESSEE's primary business; LESSEE shall bear the sole responsibility for furnishing and paying for all labor, materials, equipment and supplies used in conjunction with the exercise by the LESSEE of any right granted hereunder, unless specifically absolved from said responsibilities elsewhere within this lease.

3. TERM AND RENTAL: The term of this Lease shall be five (5) years, commencing June 1, 2009 and expiring May 31, 2014 .The LESSEE shall pay to GSA, as rent for the demised premises, the annual sum of see Rider No.3 payable in monthly installments of See Rider No.3 in advance and due on or before the first day of the month throughout the lease term. Payments shall be made in the form of a check payable to "General Services Administration" which must also be notated with the Lease Number, and mailed to General Services Administration, P.O. Box 894201, Los Angeles, CA 90189-4201. Automated lease payments may be permitted at the option of LESSOR.

Gov't Lessee

4. RENEWAL: This Lease may be renewed for three five year options, provided the following criteria are met: LESSEE must notify contracting officer of its intent to renew no later than one (1) year prior to expiration of the initial lease term or the then current renewal term with a written statement of intent; and the rental rate must be in accordance with Rider No.3 of this lease. Failure to comply with either condition will void any renewal options. Exercise of the renewal option will affect only the rental rate and term; no other term or condition can be altered in the process of renewal.

5. SERVICES AND UTILITIES: LESSEE will contract for in its own name and pay for all services and utilities associated with tenancy; all meterable utilities shall be obtained and paid for by LESSEE, who will bear the responsibility and cost of meter installation and removal. GSA provides no services or utilities under terms of this Lease. Submetering, at the option of the Government, is an acceptable alternative if utility payments are made directly to the designated Field Office, Tenant Federal entity or service provider as may be directed by LESSOR.

Notwithstanding anything else contained in the Lease and in order to address LESSEE's responsibility to provide reimbursement for its electrical utility usage when LESSEE has not contracted in its own name for electrical service, Lessee shall arrange with a third party company with documentable expertise, acceptable to LESSOR, to have metering equipment installed so the third party company can determine LESSEE's electrical usage remotely and generate appropriate periodic invoices. LESSEE shall pay all costs associated with installation, maintenance, monitoring and administration, and LESSEE shall promptly pay these invoices as directed. Lessee shall contract to have these services commence within sixty (60) days of the date this Lease is signed by both parties. LESSEE shall also provide for a submeter in all cases where LESSEE does not contract for and pay the electrical utility provider directly.

6. PROPERTY CONDITION: LESSEE understands that the demised premises are offered and leased on an "as is, where is" basis, without representation or warranty on the part of the LESSOR for suitability for any purpose. LESSEE has inspected the property, knows the extent and condition of said property, and acknowledges receipt of the premises as is, where is, from GSA. GSA is under no obligation to make any repair, alteration or addition to the property nor obligation to perform any act of maintenance or upkeep thereto.

LESSEE shall not be responsible for any environmental deficiencies or environmental conditions of the property unless said deficiencies or conditions are caused by LESSEE, LESSEE's agents, or LESSEE's contractors.

In the event of any damage, including damage by contamination, by hazards brought onto the Leased Premises by LESSEE or its officers, agents, servants, employees or invitees, LESSEE, at the election of GSA, shall promptly repair, replace or make monetary compensation for the repair or replacement of such property to the reasonable satisfaction of GSA. LESSEE shall comply with all local, state, and federal environmental laws and regulations.

Gov't

Lessee

7. GSA CONSENT FOR ALTERATIONS: LESSEE shall make no alteration, improvement, nor addition to the leased premises, nor shall cause to be placed any card, sign, billboard, without obtaining the prior written consent of GSA, said consent not to be unreasonably withheld or delayed.

8. EARNEST MONEY DEPOSIT: LESSOR acknowledges receipt of two-twelfths (2/12) of the annual amount shown in Paragraph 3 of this lease. LESSOR and LESSEE acknowledge that one-half of this earnest money deposit will be applied to the first month's rent, and the remaining one-half will be used as a security deposit to cover any monies outstanding and due GSA as a result of damage to the leased premises or other damage resulting from LESSEE's use of site or from non-performance of a contractual obligation or duty under the terms of this Lease. The security deposit will be held in a non-interest bearing escrow account and will be returned after Lease expiration when determination has been made by LESSOR that no more monies are due hereunder.

9. TERMINATION:

(a) GSA may terminate the Lease as follows:

(i) NON COMPLIANCE: The Lease may be terminated by GSA if LESSEE fails to comply with any of the terms and conditions specified herein by the issuance of 30-days' written notice provided that LESSEE has not made sufficient attempts to cure.

(ii) INSOLVENCY OR BANKRUPTCY: GSA may terminate the Lease and re-enter and take possession of the property upon issuance of 5 days' written notice to the LESSEE if it is determined that Lessee is insolvent, bankrupt, or placed in receivership, or if Lessee's assets are assigned to a trustee for the benefit of creditors. In any of these cases, LESSEE shall have sixty (60) days to cure before termination notice is issued.

(iii) FEDERAL REQUIREMENT: GSA may terminate the lease upon issuance of ninety days written notice to LESSEE under the following circumstances: a Federal need is identified for the property, the property is be leased out in its' entirety, or if the LESSEE's use of the property is not consistent with Federal program purposes.

(iv) SALE OR TRANSFER OF THE PROPERTY : If the property is to be sold or transferred by GSA during the term of this Lease, GSA may terminate this Lease by providing 90 days written notice in advance of the actual sale or transfer date.

(b) LESSEE TERMINATION: LESSEE may terminate the Lease if it reasonably determines the leased premises are no longer suitable for the purpose intended under this lease by virtue of the site's unsuitability as a communications facility for LESSEE's purposes by providing 60 days written notice.

(c) REPLACEMENT SPACE: In the event the property is required for Federal use or if GSA identifies a Federal use for it, or if the property is to be sold or transferred, LESSEE may lease space at an alternate available location at GSA's discretion.

Lessee

10. MAINTENANCE OF PREMISES: LESSEE shall exercise responsible care in the occupancy and use of the property and shall keep and maintain same in good order, normal wear and tear excepted. LESSEE's responsibilities shall include, but not be limited to, removal of trash, litter, broken glass and other hazards/obstructions from the leased premises. LESSEE shall ensure the property is maintained free of any other noxious or nuisance-causing condition. LESSEE shall be responsible for maintenance of its fire alarm and fire protection equipment, and shall respond to alarms and related system signals in a timely manner, to the satisfaction of the Government. Upon expiration or termination of this Lease, LESSEE shall vacate the property, remove all of its effects, and forthwith leave GSA in peaceful possession, free and clear of any liens, claims, or encumbrances, and in as good condition as existed at the time of commencement of this Lease, normal wear and tear excepted. If upon or after lease expiration or termination LESSOR elects to send written notice to LESSEE directing it to remove or forfeit any or all of its remaining items or equipment within 30 days, title to such items or equipment left on the premises after 30 days of LESSEE's receipt of such written notice shall vest in the United States of America.

11. ENTRY BY GSA: GSA or its designated representative (s) shall have the right to enter onto the leased property with twenty four (24) hours notice to conduct inspections, except in emergencies. GSA or its representative (s) will assume full responsibility, as provided by law, for damage to property or injuries to persons arising directly as a result of such inspection, or entry. When GSA determines that said entry has reduced the area under LESSEE's control, GSA may authorize a proportionate reduction in rental payment for the time during which LESSEE is deprived of use.

12. DESTRUCTION BY UNAVOIDABLE CASUALTY: If the property shall be destroyed or be so totally damaged by fire or other unavoidable casualty so as to render the premises untenantable, wholly or in part, then payment of rent shall cease and either party may terminate this Lease by written notice to that effect. If part of the property be rendered untenantable, rental payment may apportioned to reflect the part remaining usable to LESSEE.

13. PERMITS, TAXES AND PUBLIC UTILITIES: LESSEE shall comply with all applicable Federal state and municipal ordinances and GSA regulations in the exercise of any right herein conveyed, and shall obtain and pay for all licenses, permits, and taxes in its own name. All public utilities must be contracted for in LESSEE's name, and any meters must be installed subject to the approval of the LESSOR at no cost whatsoever to LESSOR said approval not to be unreasonably withheld or delayed. All other costs of doing business shall be borne exclusively be LESSEE.

Gov't Lessee

14. SUB-CONTRACTORS AND AGENT FOR LESSEE: All work must be performed by skilled tradesmen who are accomplished at their craft and bonded against loss due to damages resulting directly or indirectly from work performed.

15. LIABILITY AND INDEMNIFICATION: GSA, its agents and representatives shall be indemnified and held harmless from any claim for loss of or damage to life, limb or property arising directly or indirectly out of any action or the exercise of any right under this Lease.

16. INSURANCE: LESSEE shall obtain and carry, at no expense to GSA and to GSA's satisfaction, general liability insurance with limits of liability of not less than Four Million Dollars ($4,000,000.00).The insurance must include the United States of America, acting by and through the Administrator of General Services as an additional insured as respects operations under this Lease. The Certificate of Insurance shall include the following endorsement: "It is a condition of this policy that the insurance company shall furnish a written notice to the General Services Administration, Leasing Policy and Performance Division (WPQ), Outleasing, 301 7th Street, SW, Washington, DC 20407, in writing, thirty (30) days in advance of the effective date of any reduction or cancellation of this policy.

17. ASSIGNMENT OF LEASE: Except with the prior written consent of GSA, which consent shall not be unreasonably withheld, LESSEE shall neither transfer nor assign this Lease or any rights hereunder, nor sublet the property or any portion thereof, nor grant any privilege of license whatsoever in connection with this Lease unless said assignment is to a principal or affiliate of LESSEE. Any such action taken without the express written approval, assignment, and assumption of Lease by GSA will constitute a violation of this Lease by LESSEE and a trespass by any unauthorized subtenant of assignee.

18. UNIFORM RELOCATION ASSISTANCE ACT: LESSEE acknowledges that it acquires no right by virtue of execution of this lease to claim any benefits under the Uniform Relocation and Assistance Act of 1970, 84 Stat. 1894 (42 U. S. C. 4601).

19. MISCELLANEOUS:

(a) EXAMINATION OF RECORDS: The Comptroller General of the United States, the Administrator of General Services, the General Services Administration's Office of the Inspector General, or any of their duly authorized representatives shall, until expiration of three (3) years after final payment under this Lease, have access to and the right to examine any directly pertinent books, documents, papers, and/or records of the LESSEE involving transactions related to this lease and the awarding thereof.

GSA

Lessee

(b) NOTICES:
Any notice required to be given under this Lease shall be made by registered or certified mail, return receipt requested, or by recognized overnight courier or by receipted hand delivery to the addresses set forth below:

For LESSEE:	Cricket Communications, Inc. 10307 Pacific Center Court San Diego, CA 92121 Attention: Senior Director, National Real Estate
With a copy to:	Cricket Communications, Inc. 10307 Pacific Center Court San Diego, CA 92121 Attention: Legal Department – Real Estate
For LESSOR:	U.S. General Services Administration 301 7th Street, SW Room 7919 (WPQ) Washington, D.C. 20407 Attn: GSA Antenna Program

Either party may from time to time designate any other addresses for notice purposes by written notice to the other party.

(c) DISTRIBUTED ANTENNA SYSTEMS:
Prior to LESSEE 's installation and/or use of any Distributed Network Architecture that includes the use of distributed antenna systems (DAS) and software defined radios (SDR), which allow multiple transmission/reception capability by multiple providers and/or carriers using a single, combined radio system or components to be located on the leased premises, LESSEE is required to obtain prior written approval from LESSOR in the form of a Supplemental Lease Agreement for each third party that will operate radio equipment in Association with or that will receive transmission/reception capacity from LESSEE's proposed operation of such system. LESSEE's failure to obtain prior written approval from LESSOR shall be deemed a material default of LESSEE's duties under this Lease. Nothing contained herein shall be deemed a requirement for prior approval to LESSEE's provision of typical services to LESSEE's own, non-telecommunications carrier customers who receive services from LESSEE's operations which LESSEE is licensed to provide by the Federal Communications Commission.

Lessee

20. RIDERS AND ATTACHMENTS: The parties acknowledge the following attachments and riders made to this Lease and made a part hereof prior to signing:

RIDER NO 1 : Property Description

RIDER NO 2 : Special Terms Regarding Antenna Use and Installation

RIDER NO 3 : Rent

ATTACHMENT I : Disputes and Delinquent Outlease Rental Payments

ATTACHMENT II : Plan Showing Leased Premises

IN WITNESS WHEREOF

the parties hereto have caused this Lease to be executed as of the day and date first above written.

FOR THE UNITED STATES OF AMERICA,
GENERAL SERVICES ADMINISTRATION

BY: _____

NAME: _____
Contracting Officer

FOR THE LESSEE

BY _____ 6/11/09

NAME: mark works

TITLE: Regional Network Director

LESSEE SIGNATURE
EXECUTED IN THE PRESENCE OF:

Allison Terrill
Signature

7100 Columbia Gateway Dr #120
Address

Columbia MD 21046

Rider NO. 1
"Property Description"

LESSEE may install one (1) Nortel CDMA Outdoor Equipment Cabinet (measuring approximately 50"H x 52"W x 26"D), and one (1) wall-mounted power and telco "PPC" cabinet, to be located in a room known as "the 6th floor communications room", located in the northwest area of the building. In addition, LESSEE may install three (3) JayBeam Wireless model WBX065P13R050 antenna panels, one (1) GPS antenna, together with up to six (6) coaxial cables. Appropriate conduits for connection to power, telco and ground are included. The equipment shall be located where shown on "ATTACHMENT 2: PLAN SHOWING LEASED PREMISES". Equipment shall be painted or otherwise blended with the background to the satisfaction of the Government.

Notwithstanding any descriptions of LESSEE's equipment within this Lease, or descriptions and depictions as to where LESSEE's equipment may be located, LESSEE understands that it may be required to move or modify it's installation, at LESSEE's sole cost and expense, as a result of LESSOR or commission review.

All equipment shall be to provide coverage for the Cricket CDMA network only. The transmit frequency range is between 2110 Mhz and 2120 Mhz, and the receive frequency range is between 1710 Mhz and 1720 Mhz.

Equipment shall be wind-loaded to at least 100 MPH.

Lessee

RIDER NO. 2

"Special Terms Regarding Antenna Use & Installation"

RADIO FREQUENCY INTERFERENCE:

LESSEE shall ensure that the use of the lease premises does not measurably interfere with existing operations on or immediately around the site, and that situations creating the existence of Radio Frequency Interference (RFI) will be cured within 10 calendar days. If tenant cannot occupy the space without creating an incurable RFI situation, then this Lease shall be automatically terminated by mutual consent. Within ten calendar days of receiving notice of an RFI problem, LESSEE shall notify GSA in writing if there are extenuating circumstances that prevent curing the problem within ten days. Based on the circumstances, LESSEE may then be granted an extension of time to cure the problem.

ACCESS FOR LESSEE:

Access to the building must be coordinated with the Federal Government. LESSEE shall provide GSA with lists of personnel who will require access to the building. LESSEE shall update these lists and otherwise coordinate such access as required by GSA. At GSA's discretion, this function may be transferred to the Federal tenant agency of the building. LESSEE agrees to bear the costs for any security clearances or suitability determinations that may be required by the Government. LESSOR shall respond to LESSEE's requests for access within a reasonable time based on available personnel, and LESSOR may require that LESSEE reimburse the Government for security escort at the then prevailing ordinary or overtime rate for each occurrence, or at the Government's option, to pay the Government's designated contracting company directly. LESSOR also reserves the right to require LESSEE to contract directly with a GSA-designated Security Escort Service and to bear all costs of those services. LESSOR may require that LESSEE'S staff and contractor personnel be cleared by a GSA-designated federal agency and that security background applications and fingerprint cards be completed and submitted to the Government for adjudication.

INSTALLATION OF COMMUNICATION SITE:

Installation of any antennas, cabling, and related equipment shall be done in accordance with existing Federal, state and municipal codes, including the National Electrical Code and any other codes which directly relate to the issues of radio equipment and/or antennas; in any case where codes differ, the more stringent application shall prevail. All work shall be done by personnel who are bonded and licensed tradesman. LESSEE is required to coordinate installation of all electrical connections which tie into building systems with the resident building engineer and any others who have equipment and connections on the site which would be affected. Nothing in this paragraph shall be construed as diminishing the right of GSA to review and approve all such work, nor does it absolve LESSEE from its obligation to obtain

Gov't Lessee

such review and approval. The requirements of this paragraph are above and beyond the requirements for GSA review and approval. LESSEE shall make no penetrations or alterations to the roof of the leased premises without the prior consent of the Government. The Government will review all technical drawings for the installation of the communication site and all aspects of the installation will be subject to Government approval. LESSEE agrees to work with the Government's roofing contractor, where applicable, and to coordinate all roof work with that contractor and other contractors as applicable. All work must be in accordance with any existing warranties and to the satisfaction of the Government's Contractors. In the event LESSOR makes repairs or performs maintenance to the premises, LESSEE shall be responsible for relocating its equipment and personal property as needed at LESSEE's sole cost and expense. In the event the roof of the leased area is damaged as a result of work performed directly or indirectly in connection with LESSEE's improvements thereon during the construction, operation, maintenance or removal of such improvements, due to acts or omissions of LESSEE, or LESSEE's agent, contractor or employees, LESSEE shall be solely responsible for all costs and expenses to repair such damage and to return the roof to the condition it was in prior to the occurrence of such damage.

All equipment installed on the premises that is visible from the exterior of the building must be painted or camouflaged to completely blend with the background of equipment, structures of fixtures already in place and to the satisfaction of the Government. Whip antennas mounted on the exterior of the building may not exceed twelve feet in height. Panel-type antennas mounted on the exterior of the building may not exceed eight feet in width or twelve feet in length.

If electrical service is provided to LESSEE's equipment under this Lease, LESSEE shall install a submeter, the location of which will be coordinated with the local Facilities Manager. The Government reserves the right to verify electrical usage periodically and to bill LESSEE for such use in excess of the original estimated amount if included in the annual rent. LESSEE agrees to pay such charges to or on behalf of LESSOR, as the Government may specify, within 30 days of receipt of invoice.

RADIO FREQUENCY COMPLIANCE AND CERTIFICATION

LESSEE, at its sole cost and expense, shall take all necessary actions to comply with all applicable Federal Communications Commission (FCC) radio frequency (RF) exposure regulations and requirements and shall take reasonable precautions so that neither workers nor the public are subject to RF exposures above the FCC-specified levels.

LESSEE shall coordinate the compliance and certification of its installation with the FCC rules and guidelines for human exposure to RF electromagnetic fields with other telecommunications lessees on site, if any, and shall obtain written certification by a firm with documentable expertise, acceptable to LESSOR, that LESSEE's facility complies with the RF exposure regulations and requirements. LESSEE shall furnish a

Gov't Lessee

written copy of the entire report and certification to LESSOR within two (2) business days after receipt.

LESSEE shall coordinate and contract for this report and certification so that it is completed within ten (10) business days after LESSEE's equipment installation is sufficiently complete to allow transmission to commence. In addition, after the initial installation, LESSEE shall be responsible for updating this certification any time LESSEE changes its technical parameters (i.e., effective radiated power (ERP), antenna changes, etc.), within ten (10) business days after any such change. Any such updated certification shall take into account the cumulative effects of all existing communications facilities at said rooftop.

If LESSEE does not provide the required reports and certifications within the time frames specified above, then LESSOR may terminate the Lease in accordance with Paragraph 9.

If a new carrier collocates on this site, or if any existing carrier on site makes modifications to its technical parameters (i.e., ERP, antenna changes, etc.), then LESSEE shall cooperate with all parties so that updated certifications can be obtained. LESSEE shall not be responsible for the compliance of any other carrier, or for paying the costs of any other carrier's certification report, but shall work cooperatively with said carrier(s) to ensure compliance at said rooftop.

Compliance and certification under this provision shall consist of the signed RF engineering report, together with implementation of all recommendations to assure LESSEE's site-wide compliance, including, as appropriate, warning signage and other RF exposure mitigation measures.

LESSOR reserves the right to require LESSEE to make changes in its installation as needed to comply with any changes in Federal guidelines or regulations.

Lessee

Rider NO. 3 Rent

Lease Year	Annual Rent	Monthly Rent
6/01/09 – 5/31/10	$31,500.00	$2,625.00
6/01/10 – 5/31/11	$32,760.00	$2,730.00
6/01/11 – 5/31/12	$34,070.40	$2,839.20
6/01/12 – 5/31/13	$35,433.22	$2,952.77
6/01/13 – 5/31/14	$36,850.54	$3,070.88
6/01/14 – 5/31/15	$38,324.57	$3,193.71
6/01/15 – 5/31/16	$39,857.55	$3,321.46
6/01/16 – 5/31/17	$41,451.85	$3,454.32
6/01/17 – 5/31/18	$43,109.93	$3,592.49
6/01/18 – 5/31/19	$44,834.32	$3,736.19
6/01/19 – 5/31/20	$46,627.69	$3,885.64
6/01/20 – 5/31/21	$48,492.80	$4,041.07
6/01/21 – 5/31/22	$50,432.51	$4,202.71
6/01/22 – 5/31/23	$52,449.82	$4,370.82
6/01/23 – 5/31/24	$54,547.81	$4,545.65
6/01/24 – 5/31/25	$56,729.72	$4,727.48
6/01/25 – 5/31/26	$58,998.91	$4,916.58
6/01/26 – 5/31/27	$61,358.87	$5,113.24
6/01/27 – 5/31/28	$63,813.22	$5,317.77
6/01/28 – 5/31/29	$66,365.75	$5,530.48

NOTE: No rent shall be due for the periods from June 1, 2009 through July 31, 2009. Rent shall commence for the period starting August 1, 2009, and it shall escalate on June 1, 2010, and on each June 1 thereafter that the lease remains in effect for the periods listed on this Rider 3.

Lessee

DELINQUENT OUTLEASE RENTAL PAYMENTS

(1) The United States Department of Justice and the General Accounting Office have jointly issued amended Federal Claims Collection Standards (4 CFR Parts 101-105) which reflect changes to the Federal Claims Collection Act of 1966 (31 U.S.C. 3701-3719) made by the passage of the Debt Collection Act of 1982 (P.L. 97-365, 96 Stat. 1754).

(2) Under the provisions of the Debt Collection Act of 1982, the following remedies in the collection of delinquent rental payments may be taken by the Government:

(a) Interest shall be assessed on delinquent lease payments at the rate of the current value of funds to the Treasury as prescribed by the Secretary of the Treasury on the date interest begins to run or another rate of interest shall be assessed if another rate is necessary to protect the interests of the United States;

(b) Penalty charges not to exceed six percent per year shall be assessed on any portion of a delinquent lease payment over 90 days past due;

(c) Administrative charges may be assessed to cover the costs of processing and handling delinquent lease payments;

(d) Delinquent outlease debtor information may be disclosed to credit bureaus;

(e) Delinquent outlease debtor files may be referred to debt collection agencies;

(f) Delinquent lease payments may be collected by administrative offset whenever possible.

(3) The Government's remedies to collect delinquent lease payments shall be administered by:

GENERAL SERVICES ADMINISTRATION
Finance Division (7BCRP)
819 Taylor Street
Fort Worth, TX 76102
Telephone: (817) 978-7556

(4) This lease is subject but not limited to the following laws and Regulations: 4 CFR Part 102.3(b)(2)(i), the Debt Collection Act of 1982 Section II, Public Law PL 97-365, and GSA Finance Accounts Receivable Handbook PFM P 4253.1.

Lessee

DISPUTES

37. 52.233-1- DISPUTES (JUL 2002)

(a) This contract is subject to the Contract Disputes Act of 1978, as amend (41 USC 601-613).

(b) Except as provided in the Act, all disputes arising under or relating to this contract shall be resolved under this clause.

(c) "Claim," as used in this clause, means a written demand or written assertion by one of the contracting parties seeking, as a matter of right, the payment of money in a sum certain, the adjustment or interpretation for contract terms, or other relief arising under or relating to this contract. However, a written demand or written assertion by the Contractor seeking the payment of money exceeding $100,000 is not a claim under the Act until certified. A voucher, invoice, or other routine request for payment that is not in dispute when submitted is not a claim under the Act. The submission may be converted to a claim under the Act, by complying with the submission and certification requirements of this clause, if it is disputed either as to liability or amount or is not acted upon in a reasonable time.

(d) (1) A claim by the Contractor shall be made in writing and, unless otherwise stated in this contract, submitted within 6 years after accrual of the claim to the Contracting Officer for a written decision. A claim by the Government against the Contractor shall be subject to written decision by the Contracting Officer.

(2) (i) The Contractor shall provide the certification specified in paragraph (d)(2)(iii) of this clause when submitting any claim exceeding $100,000.

(ii) The certification requirement does not apply to issues in controversy that have not been submitted as all or part of a claim.

(iii) The certification shall state as follows: :I certify that the claim is made in good faith; that the supporting data are accurate and complete to the best of my knowledge and belief; that the amount requested accurately reflects the contract adjustment for which the contractor believes the Government is liable; and that I am duly authorized to certify the claim on behalf of the Contractor."

(3) The certification may be executed by any person duly authorized to bind the Contractor with respect to the claim.

(e) For Contractor claims of $100,000 or less, the Contracting Officer must, if requested in writing by the Contractor, render a decision within 60 days of the request. For Contractor-certified claims over $100,000, the Contracting Officer must, within 60 days, decide to claim or notify the Contractor of the date by which the decision will be made.

(f) The Contracting Officer's decision shall be final unless the Contractor appeals or files a suit as provided in the Act.

(g) If the claim by the Contractor is submitted to the Contracting Officer or a claim by the Government is presented to the Contractor, the parties, by mutual consent, may agree to use alternative dispute resolution (ADR). If the Contractor refuses an offer for ADR, the Contractor shall inform the Contracting Officer, in writing, of the Contractor's specific reasons for rejecting the offer.

(h) The Government shall pay interest on the amount found due and unpaid from (1) the date that the Contracting Officer receives the claim (certified, if required); or (2) the date that payment otherwise would be due, if that date is later, until date of payment. With regard to claims having defective certifications, as defined in FAR 33.201, interest shall be paid from the date that the Contracting Officer initially receives the claim. Simple interest on claims shall be paid at the rate, fixed by the Secretary of the Treasury as provided in the Act, which is applicable to the period during which the Contracting Officer receives the claim and then at the rate applicable for each 6-month period as fixed by the Treasury Secretary during the pendency of the claim.

(i) The Contractor shall proceed diligently with performance of this contract, pending final resolution of any request for relief, claim, appeal, or action arising under the contract, and comply with any decision of the Contracting Officer.

Lessee

ATTACHMENT 2: PLAN SHOWING LEASED PREMISES
Lease #GS-06-11-0908

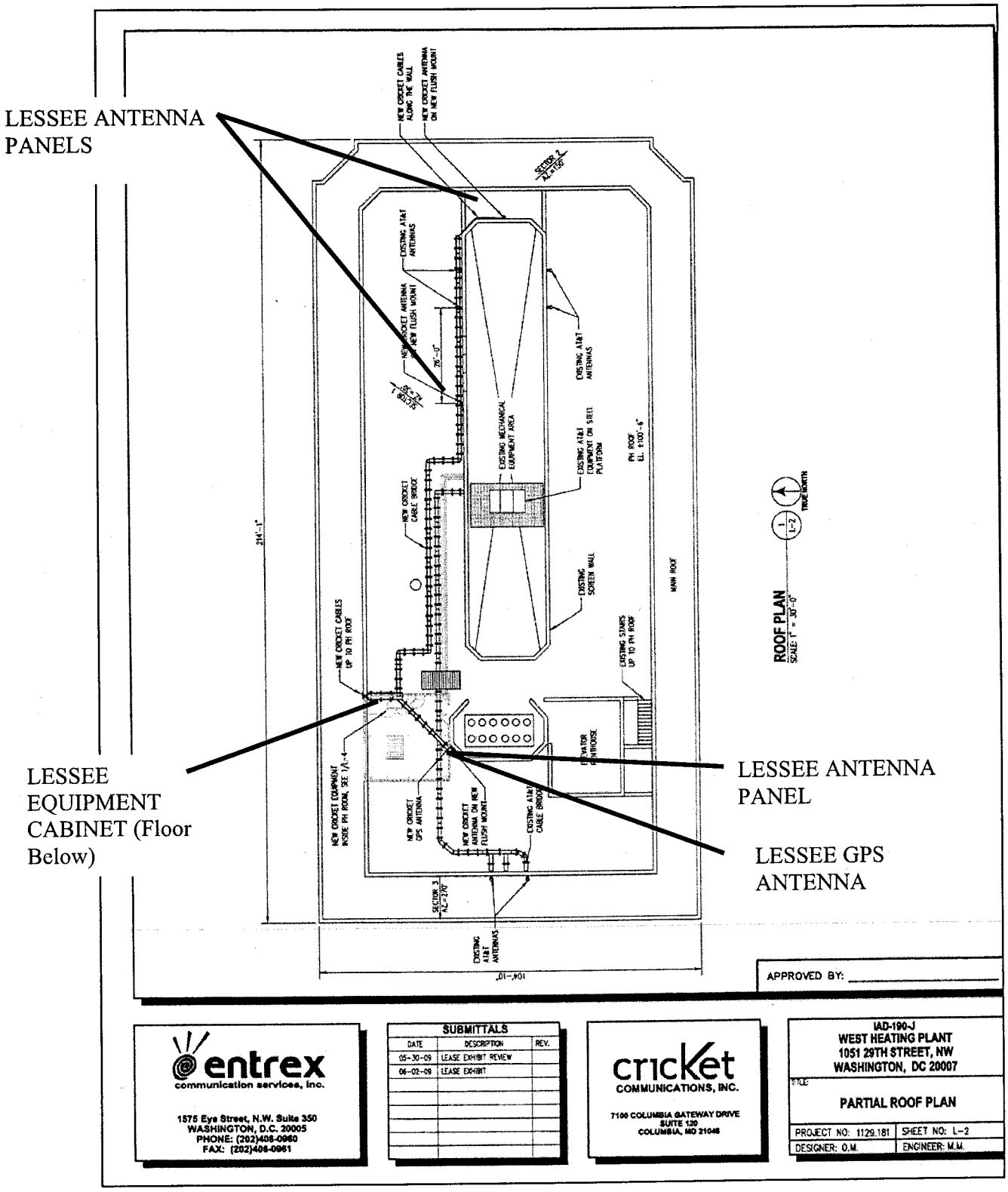

ATTACHMENT 2: PLAN SHOWING LEASED PREMISES
Lease #GS-06-11-0908
(Page 2 of 2)

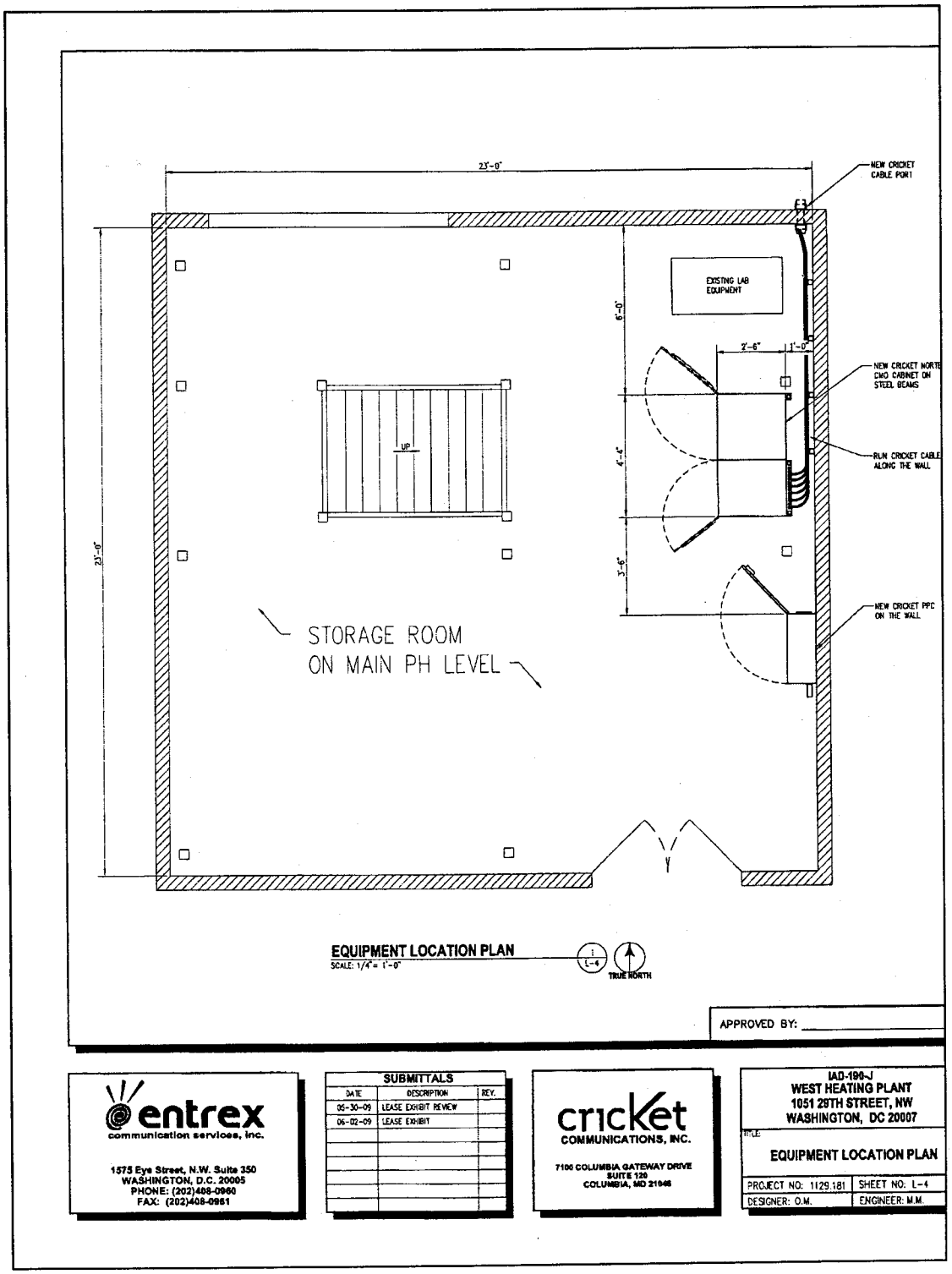

GENERAL SERVICES ADMINISTRATION PUBLIC BUILDINGS SERVICE SUPPLEMENTAL LEASE AGREEMENT	SUPPLEMENTAL AGREEMENT No. 1 TO LEASE NO. GS-06-11-0908	DATE 6/25/09

ADDRESS OF PREMISES GSA West Heating Plant
1051 29th Street, NW
Washington, DC

THIS AGREEMENT, made and entered into this date by and between Cricket Communications, Inc.

whose address is: 10307 Pacific Center Court
Can Diego, CA 92121

hereinafter called the LESSEE, and the UNITED STATES OF AMERICA, hereinafter called the Government or the LESSOR.

WHEREAS, the parties hereto desire to amend the above Lease;

NOW THEREFORE, these parties for the considerations hereinafter covenant and agree that the said lease is hereby amended as follows:

LESSEE may temporarily install a 1' microwave point-to-point antenna to provide for telephone connectivity for their cell site installation. LESSEE's plan is to coordinate with the incumbent local exchange carrier ("ILEC") to increase telephone capacity to the West Heating Plant, and then to obtain on-site wireline connectivity from the ILEC. If the antenna provided for in this Supplemental Lease Agreement ("SLA"), together with all cabling and mounting items are not de-installed and completely removed on or before September 1, 2009, the 1' dish can remain, but rent shall increase by $400 per month, which amount shall escalate at the same time and in the same manner as the remainder of the rent provided for under this Lease, and in that event the rent schedule appearing as page two of this SLA shall replace the rent schedule appearing in Rider 3 of the Lease.

The microwave dish may be placed in the area of the roof shown below, as coordinated with LESSOR:

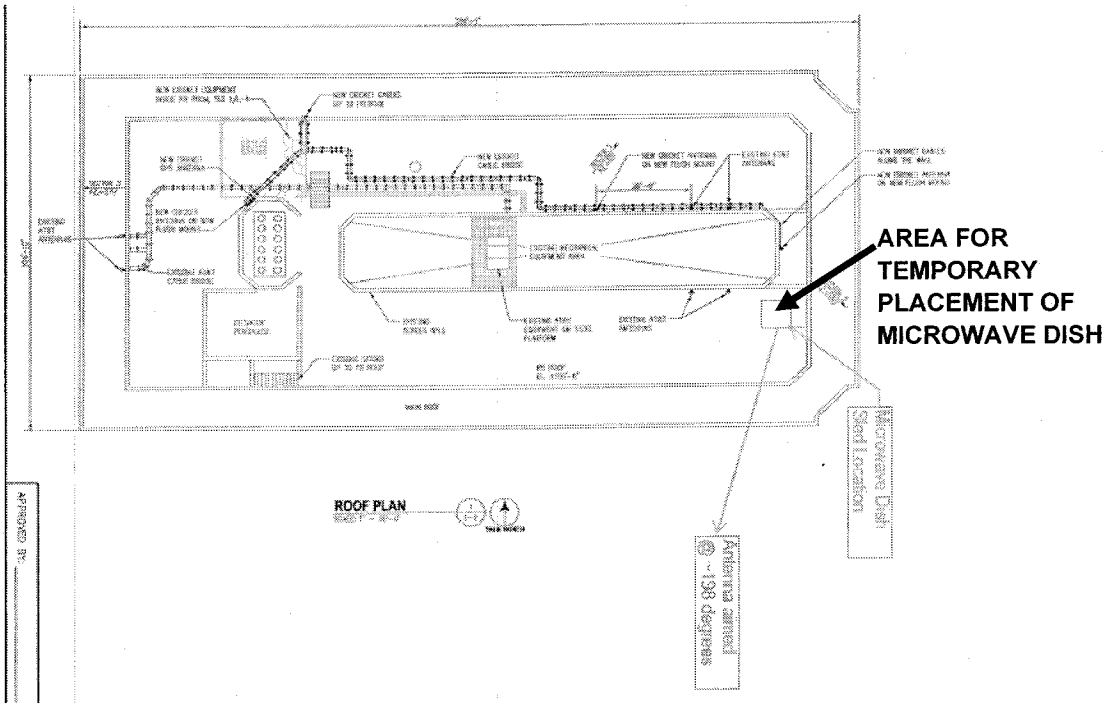

The dish, and any mounting equipment shall be wind-loaded to at least 100 MPH. Any cable trays shall be of a gauge and type acceptable to the Government.

LESSEE shall present requests to do any site alteration projects, upgrade projects or other proposed changes in a coordinated fashion, managed by a single point of contact project manager for LESSEE. This project manager for LESSEE must be familiar with and be able to present all phases of the project, to ensure that proposed plans encompass the entire project, and to have the authority to represent the proposed project on behalf of LESSEE. LESSEE understands that multiple fragmented proposal requests for alterations, upgrades or other proposed changes will not be considered.

Gov't Lessee

#GS-06-11-0908
SLA #1

If the dish provided for in this SLA, along with all mounting items, are not completely removed on or before September 1, 2009, the following rent schedule replaces the rent schedule in Rider 3 of the Lease as of that date:

LEASE YEAR	ANNUAL RENT	MONTHLY RENT
09/01/09 - 05/31/10	9 month period	$3,025.00
06/01/10 - 05/31/11	$37,752.00	$3,146.00
06/01/11 - 05/31/12	$39,262.08	$3,271.84
06/01/12 - 05/31/13	$40,832.56	$3,402.71
06/01/13 - 05/31/14	$42,465.87	$3,538.82
06/01/14 - 05/31/15	$44,164.50	$3,680.38
06/01/15 - 05/31/16	$45,931.08	$3,827.59
06/01/16 - 05/31/17	$47,768.32	$3,980.69
06/01/17 - 05/31/18	$49,679.06	$4,139.92
06/01/18 - 05/31/19	$51,666.22	$4,305.52
06/01/19 - 05/31/20	$53,732.87	$4,477.74
06/01/20 - 05/31/21	$55,882.18	$4,656.85
06/01/21 - 05/31/22	$58,117.47	$4,843.12
06/01/22 - 05/31/23	$60,442.17	$5,036.85
06/01/23 - 05/31/24	$62,859.86	$5,238.32
06/01/24 - 05/31/25	$65,374.25	$5,447.85
06/01/25 - 05/31/26	$67,989.22	$5,665.77
06/01/26 - 05/31/27	$70,708.79	$5,892.40
06/01/27 - 05/31/28	$73,537.14	$6,128.09
06/01/28 - 05/31/29	$76,478.63	$6,373.22

All other terms and conditions of the lease shall remain in full force and effect.

IN WITNESS WHEREOF, the parties subscribed their names as of the above date.

LESSEE

BY _____ Regional Network Director
(Signature) Name: Mark Work (Title)

IN THE PRESENCE OF

Allison Terrill 7100 Columbia Gateway Dr #120
(Signature) Name: Allison Terrill (Address) Columbia MD 21046

UNITED STATES OF AMERICA

BY _____ Contracting Officer, GSA,NCR,PBS
(Signature) Name: (Official Title)

A-3: Lease Assumption Form

ASSIGNMENT AND ASSUMPTION

WHEREAS, _____ and the UNITED STATES OF AMERICA entered into Lease No. GS- _____ dated _____, covering a total of _____ located in _____.

WHEREAS, _____ has sold and conveyed its interest in the subject property to _____.

NOW THEREFORE, the undersigned hereby agrees that said lease is assigned, transferred, and conveyed to _____ and relinquishes all rights under the lease agreement, effective _____.

IN WITNESS WHEREOF, I have executed this agreement on the _____ day of _____, 20____.

_____
Name of Company, Corporation,
Partnership or Individual(s)

By: _____

Name: _____

Title: _____

The undersigned as successor-lessor, hereby assumes, approves, and adopts lease No. GS- _____, and hereby agrees to be bound by, and undertakes to perform each and every term, covenant, and condition contained in the lease. The successor-lessor further assumes all obligations and liabilities of all claims and demands against the prior lessor under the lease in all respects as if the successor-lessor were the original party to the lease.

_____
Name of new Company, Corporation,
Partnership or Individual(s)

By: _____

Name: _____

Title: _____

We approve of the above Assignment of Lease on behalf of the United States of America as of this _____ day of _____, 20 _____.

GENERAL SERVICES ADMINISTRATION

By: _____

Name: _____

Title: _____

Exhibit B

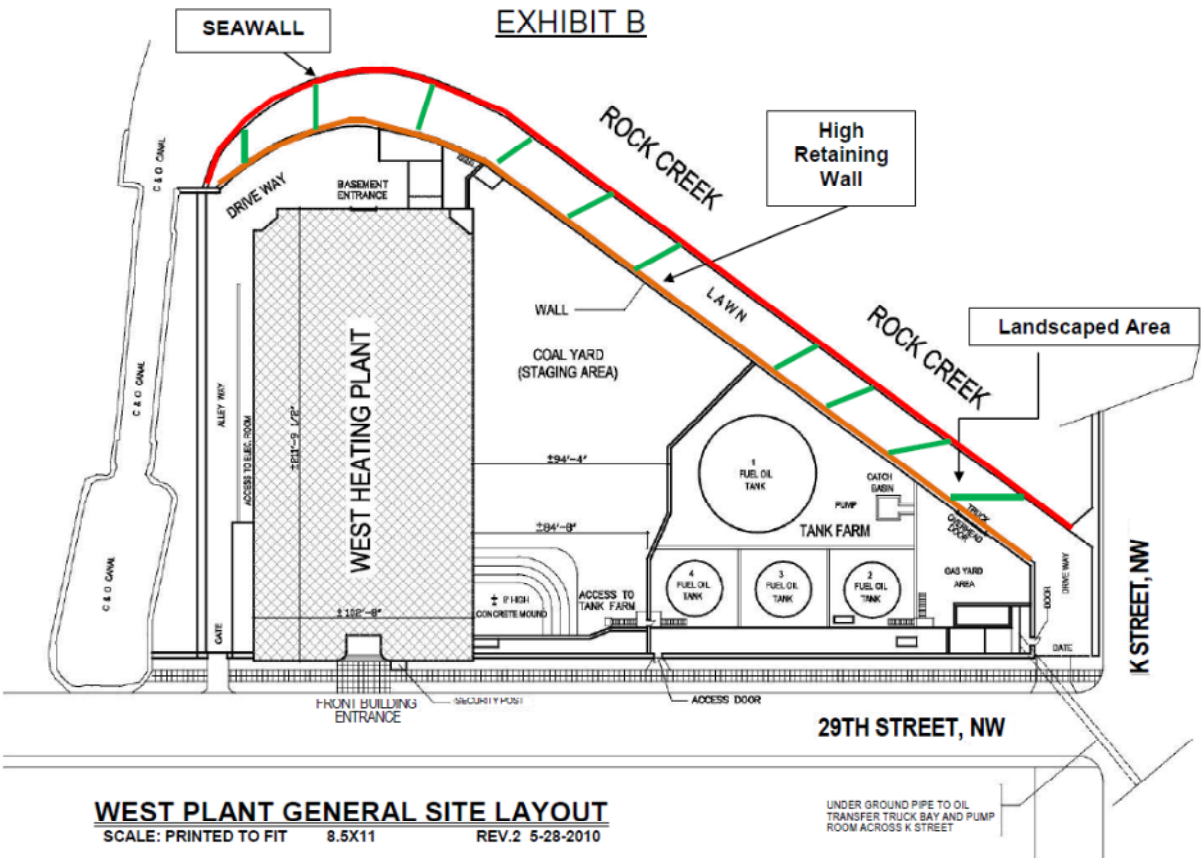
EXHIBIT B
SEAWALL
ROCK CREEK
High Retaining Wall
ROCK CREEK
Landscaped Area
LAWN
WALL
COAL YARD (STAGING AREA)
WEST HEATING PLANT
DRIVE WAY
BASEMENT ENTRANCE
C & O CANAL
ALLEY WAY
ACCESS TO ELEC. ROOM
GATE
±94'-4"
±84'-8"
±102'-8"
1 FUEL OIL TANK
CATCH BASIN
PUMP
TANK FARM
TRUCK OVERHEAD DOOR
4 FUEL OIL TANK
3 FUEL OIL TANK
2 FUEL OIL TANK
GAS YARD AREA
DOOR
DRIVE WAY
GATE
± 8' HIGH CONCRETE MOUND
ACCESS TO TANK FARM
FRONT BUILDING ENTRANCE
SECURITY POST
ACCESS DOOR
29TH STREET, NW
K STREET, NW
UNDER GROUND PIPE TO OIL TRANSFER TRUCK BAY AND PUMP ROOM ACROSS K STREET
WEST PLANT GENERAL SITE LAYOUT
SCALE: PRINTED TO FIT 8.5X11 REV.2 5-28-2010

Exhibit C

The grantee will need to seal the tunnel at approximately station 51+90 as shown on drawing No. 399. The tunnel will be sealed with a concrete or masonry wall at that location. Grantee will coordinate final wall location with GSA prior to starting work. In addition, the following existing lines will need to be cut and capped:

North Wall
1 - 1.5” alarm conduit
1 - 1.5” electrical conduit
1 – 3” trap return line
1 – 10” pump condensate line

South Wall
2 – 20” steam lines.

Grantee will need to coordinate construction with Grantor. Grantee must submit construction plans to GSA for approval prior to beginning work.

2 drawings will be provided as a separate file.

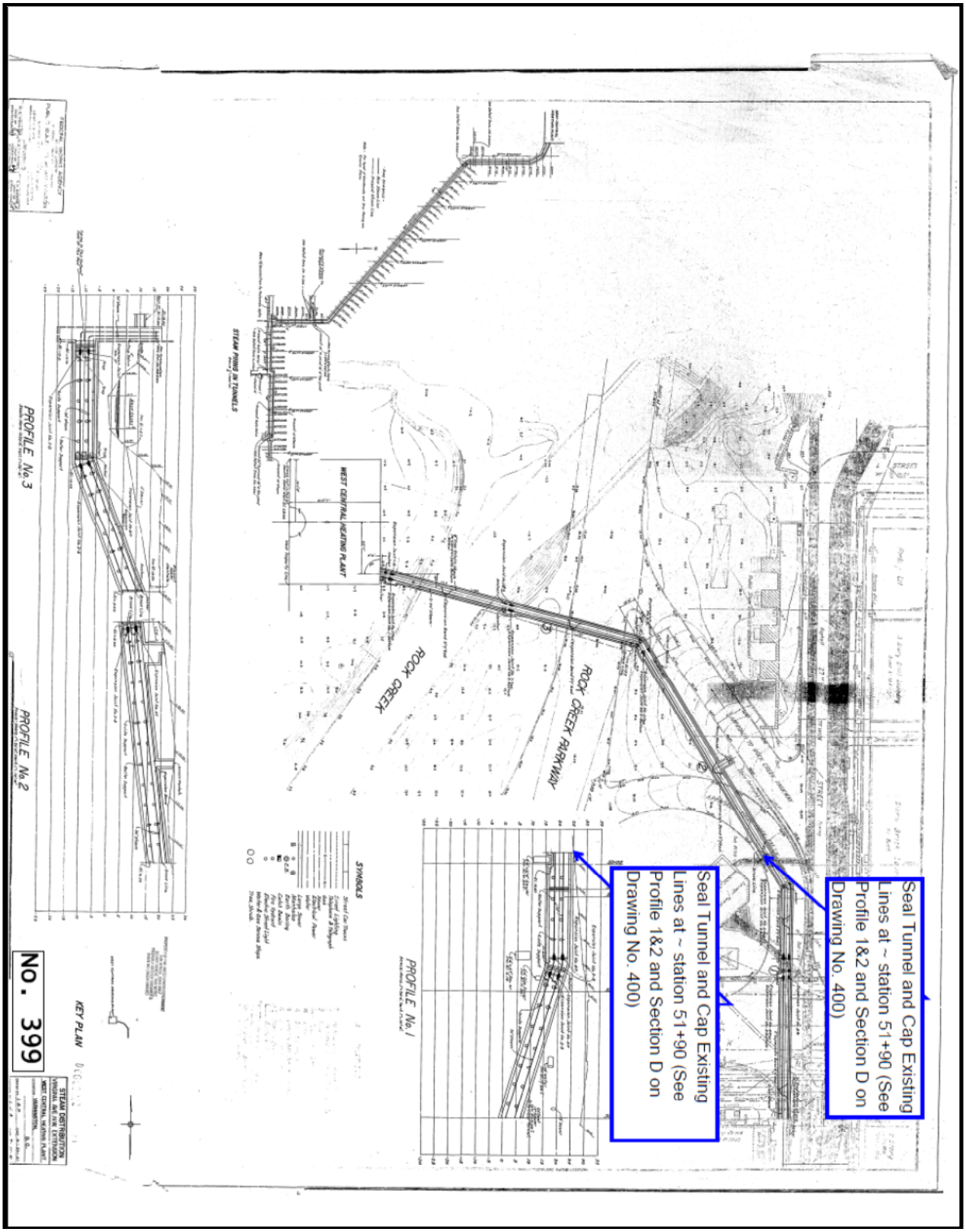
Seal Tunnel and Cap Existing Lines at ~ station 51+90 (See Profile 1&2 and Section D on Drawing No. 400)
Seal Tunnel and Cap Existing Lines at ~ station 51+90 (See Profile 1&2 and Section D on Drawing No. 400)
ROCK CREEK PARKWAY
ROCK CREEK
WEST CENTRAL HEATING PLANT
STEAM PIPES IN TUNNELS
PROFILE No. 1
PROFILE No. 2
PROFILE No. 3
SYMBOLS
KEY PLAN
No. 399
STEAM DISTRIBUTION
WEST CENTRAL HEATING PLANT

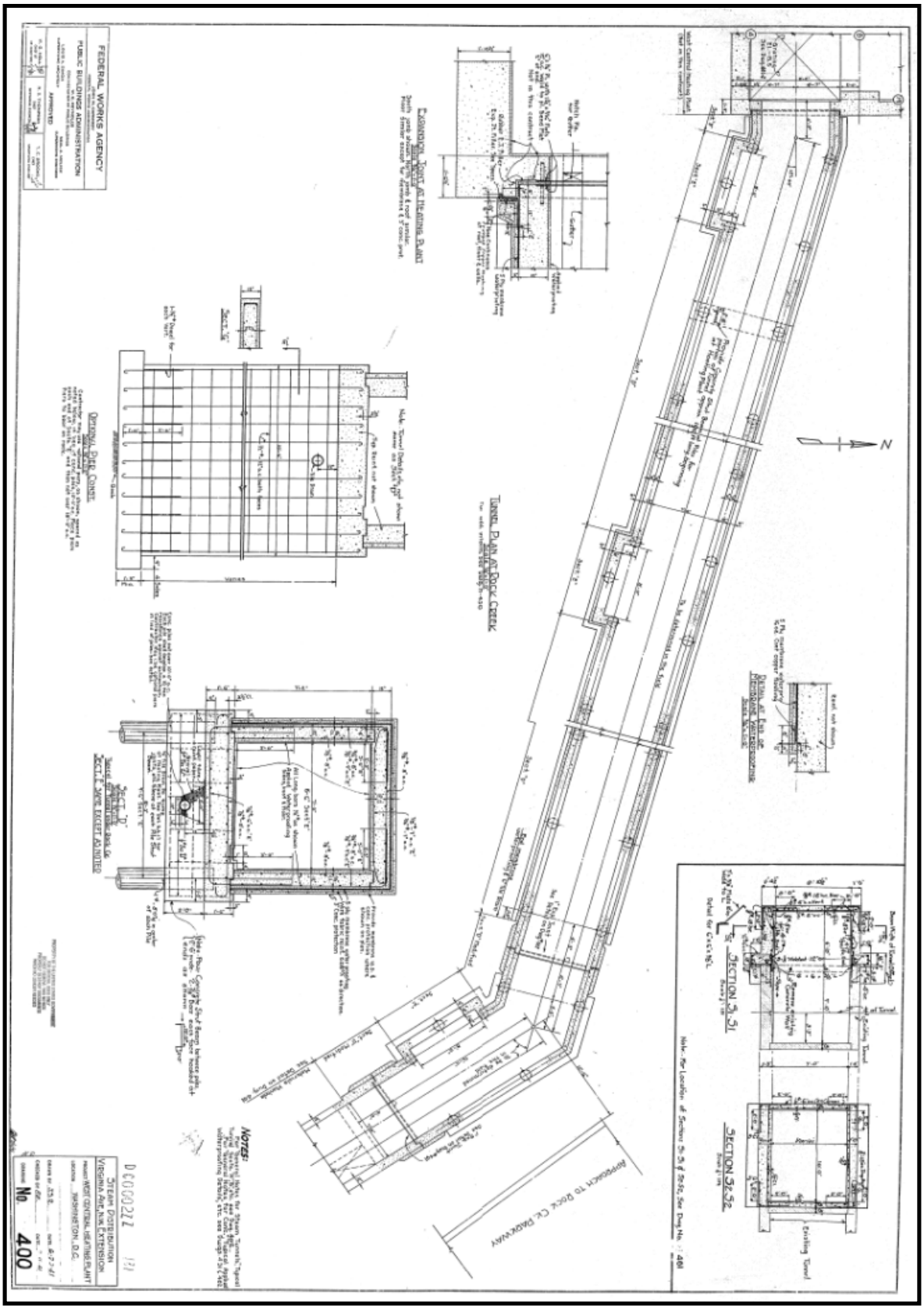
FEDERAL WORKS AGENCY
PUBLIC BUILDINGS ADMINISTRATION
APPROVED
Tunnel Plan at Rock Creek
Section 5-5
Section 5-5A
Section 5-5B
Section 7-7
Section 7-7A
Section 7-7B
Section 8-8
Section 8-8A
Section 8-8B
Section 9-9
Section 9-9A
Section 9-9B
Section 10-10
Section 10-10A
Section 10-10B
Section 11-11
Section 11-11A
Section 11-11B
Section 12-12
Section 12-12A
Section 12-12B
Section